ENAPART

93 S Railroad Avenue Unit C
Bergenfield NJ 07621 USA
www.enapart.com
sales@enapart.com

Friedrich-Ebert-Anlage 36, 60325
Frankfurt am Main, Germany
www.enapart.de
anfrage@enapart.de

〒584-0023　大阪府富田林市若松町
東2丁目2番16号
www.enapart.co.jp
sales@enapart.co.jp

Via del Canneto 35,
Borgosatollo, Brescia - Italia
www.enapart.it
vendite@enapart.it

4 boulevard Carnot, 95400
villiers-le-bel, Paris, France
www.enapart.fr
sales@enapart.fr

PLAZA NUESTRA SEÑORA DE LAS
NIEVES 12 ,LOCAL ,50012,ZARAGOZA
www.enapart.es
ventas@enapart.es

Barbaros Mah. Ihlamur Bul. Ağaoğlu
My Newwork No:3/15 Ataşehir / İstanbul
www.enapart.net
satis@enapart.net

65049, ОДЕСА, ВУЛИЦЯ ІВАНА
ФРАНКА, БУДИНОК 55, ПОВЕРХ 3
www.enapart.com.ua
sales@enapart.com.ua

Складова база „Онгъл“, Склад А2, п.к.
4006, гр. Пловдив, България
www.enapart.bg
sales@enapart.bg

PRIVADA 10 B SUR #3908 COL.
ANZUREZ, C.P. 72530, PUEBLA,PUE
www.enapart.com.mx
sales@enapart.com.mx

MUNICIPIUL BUCUREŞTI, SECTOR 3,
B-DUL BASARABIA, NR.250, CORP P+5
www.enapart.ro
sales@enapart.ro

3 Austin Mews, High Street, Hemel
Hempstead, HP1 3AF , United Kingdom
www.enapart.co.uk
sales@enapart.co.uk

Dimensions of Push Side Stroke Adjusting Cylinder (mm)

●Flange mounting type DAP Bore size × Stroke -3

● φ 20, φ 25

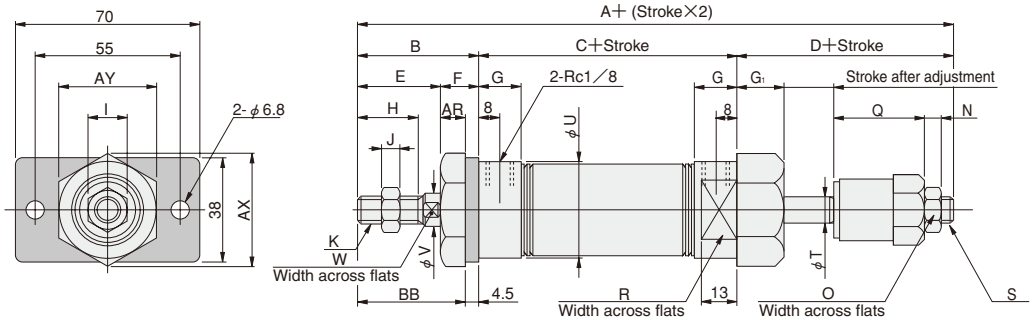

● φ 32, φ 40

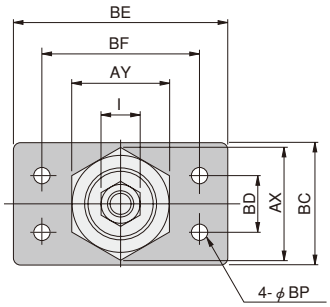

Bore mm [in.] \ Code	A	B	C	D	E	F	G	G1	H	I	J	K	L	N	O	Q	R	S	T	U	V	W
20 [0.787]	171	35	76	60	23	12	16	15	15	12	5	M 8×1	M20×1.5	5	12	36	22	M 8×1	8	27	8	6
25 [0.984]	179	40	76	63	26	14	16	17	18	14	6	M10×1.25	M22×1.5	6	14	36	24	M10×1.25	10	29	10	8
32 [1.260]	187	45	76	66	31	14	16	18	23	14	6	M10×1.25	M27×2	7	19	36.5	30	M12×1.25	12	35	12	10
40 [1.575]	191	45	76	70	31	14	(14.5)	18	23	19	8	M14×1.5	M33×2	10	24	36.5	36	M16×1.5	16	41.6	16	14

Bore mm [in.] \ Code	AR	AX	AY	BB	BC	BD	BE	BF	BP
20 [0.787]	7.5	31.2	27	30.5	—	—	—	—	—
25 [0.984]	9.5	34.6	30	35.5	—	—	—	—	—
32 [1.260]	9.5	41.6	36	40.5	45	20	80	60	6.8
40 [1.575]	9.5	47.3	41	40.5	50	30	100	80	9

Dimensions of Pull Side Stroke Adjusting Cylinder (mm)

●Basic type DAE Bore size × Stroke

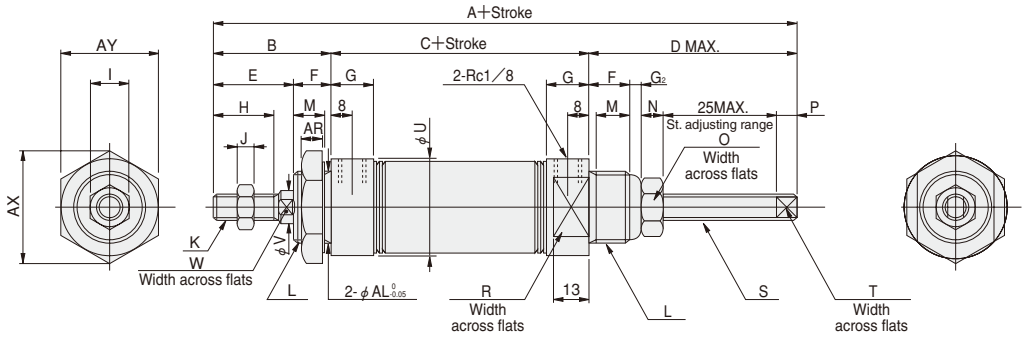

Bore mm [in.] \ Code	A	B	C	D	E	F	G	G2	H	I	J	K	L	M	N	O	P	R	S	T	U	V	W
20 [0.787]	175	35	86	54	23	12	16	2	15	12	5	M 8×1	M20×1.5	10	5	12	5	22	M 8×1	6	27	8	6
25 [0.984]	183	40	86	57	26	14	16	2	18	14	6	M10×1.25	M22×1.5	12	5	12	5	24	M 8×1	6	29	10	8
32 [1.260]	196	45	91	60	31	14	16	3.5	23	14	6	M10×1.25	M27×2	12	7	19	5	30	M12×1	9	35	12	10
40 [1.575]	198	45	91	62	31	14	(14.5)	3.5	23	19	8	M14×1.5	M33×2	12	7	19	5	36	M12×1	9	41.6	16	14

Bore mm [in.] \ Code	AR	AX	AY	AL
20 [0.787]	7.5	31.2	27	20
25 [0.984]	9.5	34.6	30	22
32 [1.260]	9.5	41.6	36	27
40 [1.575]	9.5	47.3	41	33

●Foot mounting type DAE Bore size × Stroke -1

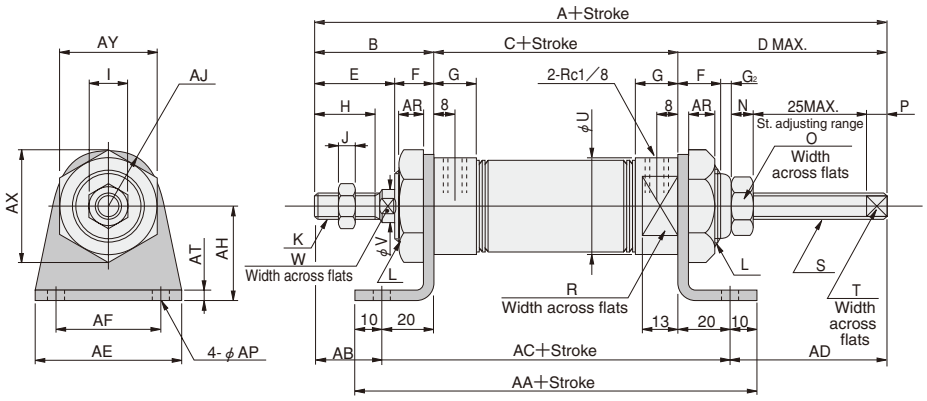

Bore mm [in.] \ Code	A	B	C	D	E	F	G	G2	H	I	J	K	L	N	O	P	R	S	T	U	V	W
20 [0.787]	175	35	86	54	23	12	16	2	15	12	5	M 8×1	M20×1.5	5	12	5	22	M 8×1	6	27	8	6
25 [0.984]	183	40	86	57	26	14	16	2	18	14	6	M10×1.25	M22×1.5	5	12	5	24	M 8×1	6	29	10	8
32 [1.260]	196	45	91	60	31	14	16	3.5	23	14	6	M10×1.25	M27×2	7	19	5	30	M12×1	9	35	12	10
40 [1.575]	198	45	91	62	31	14	(14.5)	3.5	23	19	8	M14×1.5	M33×2	7	19	5	36	M12×1	9	41.6	16	14

Bore mm [in.] \ Code	AA	AB	AC	AD	AE	AF	AH	AJ	AP	AR	AT	AX	AY
20 [0.787]	146	15	126	34	55	40	25	15.5	6.8	7.5	3.2	31.2	27
25 [0.984]	146	20	126	37	55	40	30	17	6.8	9.5	3.2	34.6	30
32 [1.260]	151	25	131	40	55	40	35	20	6.8	9.5	3.2	41.6	36
40 [1.575]	151	25	131	42	75	55	40	23.5	9	9.5	4	47.3	41

Dimensions of Pull Side Stroke Adjusting Cylinder (mm)

●Flange mounting type DAE Bore size × Stroke -3

● φ 20, φ 25

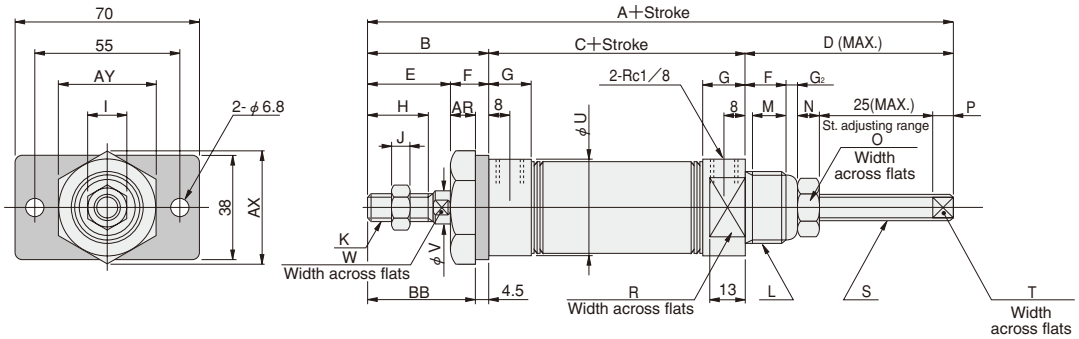

● φ 32, φ 40

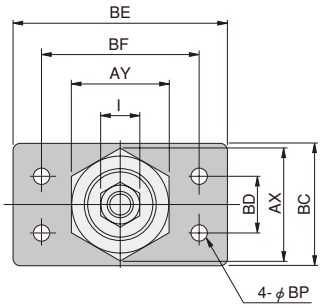

Bore mm [in.] \ Code	A	B	C	D	E	F	G	G2	H	I	J	K	L	M	N	O	P	R	S	T	U	V	W
20 [0.787]	175	35	86	54	23	12	16	2	15	12	5	M 8×1	M20×1.5	10	5	12	5	22	M 8×1	6	27	8	6
25 [0.984]	183	40	86	57	26	14	16	2	18	14	6	M10×1.25	M22×1.5	12	5	12	5	24	M 8×1	6	29	10	8
32 [1.260]	196	45	91	60	31	14	16	3.5	23	14	6	M10×1.25	M27×2	12	7	19	5	30	M12×1	9	35	12	10
40 [1.575]	198	45	91	62	31	14	(14.5)	3.5	23	19	8	M14×1.5	M33×2	12	7	19	5	36	M12×1	9	41.6	16	14

Bore mm [in.] \ Code	AR	AX	AY	BB	BC	BD	BE	BF	BP
20 [0.787]	7.5	31.2	27	30.5	—	—	—	—	—
25 [0.984]	9.5	34.6	30	35.5	—	—	—	—	—
32 [1.260]	9.5	41.6	36	40.5	45	20	80	60	6.8
40 [1.575]	9.5	47.3	41	40.5	50	30	100	80	9

SLIM END KEEP CYLINDERS

Head Side End Keep, Rod Side End Keep

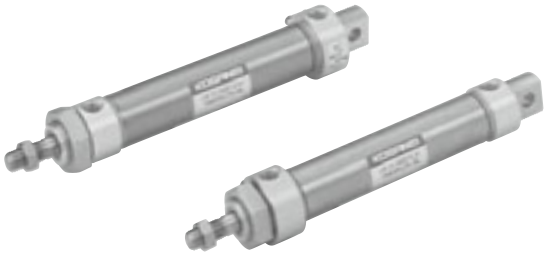

Symbols

●Head side end keep

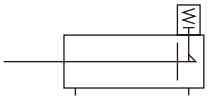

●Rod side end keep

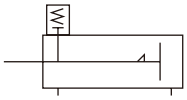

Specifications

Item / Bore size mm [in.]	20 [0.787]	25 [0.984]	32 [1.260]	40 [1.575]	50 [1.969]	63 [2.480]
Operation type	Double acting type, with head side or rod side end keep mechanism					
Media	Air					
Mounting type	Basic type, Foot type, Flange type, Pivot type					
Operating pressure range MPa [psi.]	0.1～0.9 [15～131]				0.1～0.7 [15～102]	
Proof pressure MPa [psi.]	1.32 [191]				1.03 [149]	
Operating temperature range °C [°F]	0～70 [32～158]					
Operating speed range mm/s [in./sec.]	50～700 [2.0～27.6]				50～500 [2.0～19.7]	
Cushion	Fixed type (Rubber bumper)				Variable type (Stroke 15mm [0.591in.])	
Lubrication	Not required					
Maximum holding force (at end keep) N [lbf.]	194.2 [43.7]	303 [68.1]	496.2 [111.5]	775.7 [174.4]	943.4 [212.1]	1497 [336.5]
Backlash (at end keep) mm [in.]	1.4 [0.055] MAX.		1.6 [0.063] MAX.			
Port size Rc	1/8				1/4	

Bore Size and Stroke

mm

Bore size	Standard strokes	Maximum stroke		Maximum available stroke	
		No bellows	With bellows	No bellows	With bellows
20	25 50 75 100 125 150	200		1050	740
25	25 50 75 100 125 150 200	250			
32	25 50 75 100 125 150 200	300			
40	25 50 75 100 125 150 200 250 300	400	300		
50	25 50 75 100 150 200 [250 300 350 400]	300[500]	300	900	
63	25 50 75 100 150 200 [250 300 350 400 500]	300[600]	300		

Remarks: 1. Stroke tolerance $^{+1}_{0}$ [$^{+0.039in.}_{0}$]
2. For non-standard strokes, consult us.
3. Figures in parentheses [ ] are for cases when foot mounting brackets are used for mounting.
4. The minimum operating pressure when the stroke is over the maximum stroke at bore size of ϕ20～ϕ40 is 0.2MPa [29psi.].

Order Codes

DA □ **K** □ **20×50** – □ – □ – □ – □ – □ – □ □ □

Slim cylinder

Bellows
Blank — No bellows
J — With bellows (Made to order)

End keep cylinder

Bore size × Stroke

Non-ion specification
Blank — Standard
NCU — Non-ion specification

Scraper
Blank — No scraper
Y — With scraper (Made to order; available at ϕ50 and ϕ63 only)

Head cover specification
Blank — Standard head
A — Short head

End keep position
HL — Head side end keep
RL — Rod side end keep

Mounting type
Blank — Basic type
1 — Double foot mounting type
3 — Flange mounting type
8B — Pivot mounting type with bushing (Available at ϕ50 and ϕ63 only)
8E — Pivot mounting type with supporting bracket (with pin) (Available at ϕ20～40 only)
8B-8E — Pivot mounting type with bushing and supporting bracket (Available at ϕ50 and ϕ63 only)
● Mounting brackets are included at shipping.
(Except for pivot mounting type and pivot mounting type with bushing)

Rod end accessory
Blank — No rod end accessory
I — I type knuckle
Y — Y type knuckle (with pin)
● For the cylinder joint and cylinder rod end, see p.1568.

Sensor switch (for cylinders with sensor switches)

Blank	No sensor switch		
ZG530	2-lead wire Solid state type	with indicator lamp	DC10～28V
ZG553	3-lead wire Solid state type	with indicator lamp	DC4.5～28V
CS3M	Reed switch type	with indicator lamp	DC10～30V AC85～230V
CS4M	Reed switch type	with indicator lamp	DC10～30V AC85～115V
CS5M	Reed switch type	without indicator lamp	DC3～30V AC85～115V
CS2F	Reed switch type	with indicator lamp	AC85～230V
CS3F	Reed switch type	with indicator lamp	DC10～30V
CS4F	Reed switch type	with indicator lamp	DC10～30V
CS5F	Reed switch type	without indicator lamp	DC3～30V

● For details of sensor switches, see p.1544.
● **CS□F** comes with DIN connector. All others are grommet type.

Lead wire length
(Applies to all except **CS□F**)
A — 1000mm [39in.]
B — 3000mm [118in.]

Number of sensor switches
1 — With 1 sensor switch
2 — With 2 sensor switches
3 — With 3 sensor switches
⋮ ⋮

Inner Construction and Major Parts (cannot be disassembled)

● φ 20, φ 25

●Rod side end keep

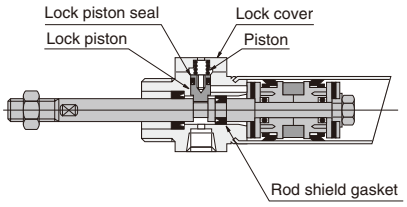

●Head side end keep

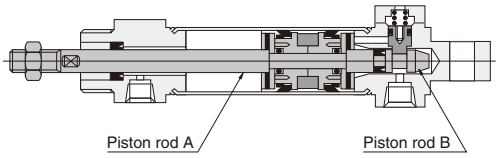

● φ 32, φ 40

●Rod side end keep

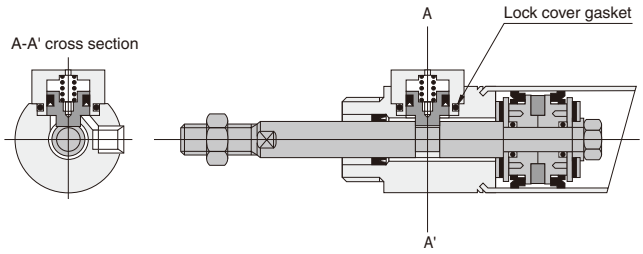

●Head side end keep

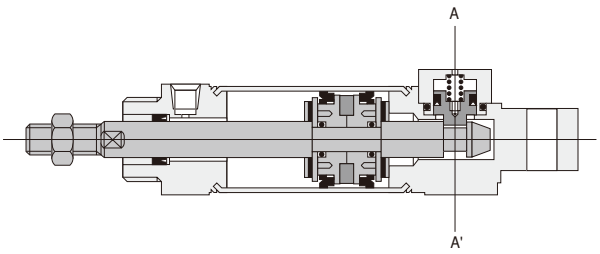

● φ 50, φ 63

●Rod side end keep

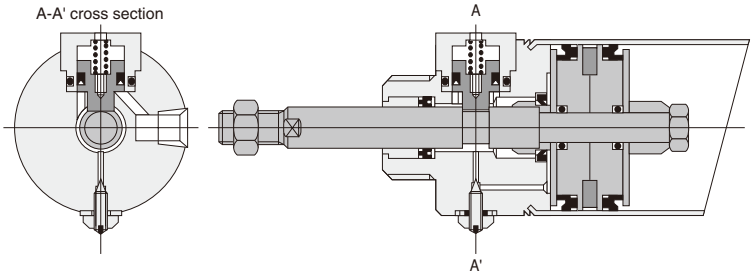

●Head side end keep

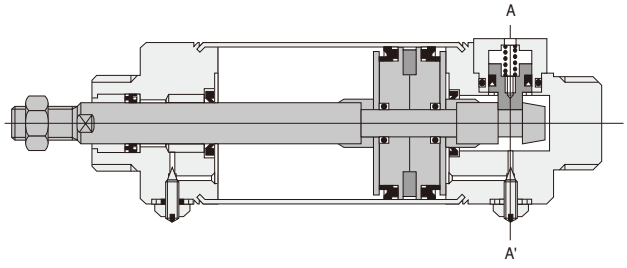

Major Parts and Materials

Parts	20, 25	32, 40, 50, 63
Piston rod A	Steel (hard chrome plated)	
Piston rod B	Steel (zinc plated)	
Spring	Stainless steel	Piano wire
Lock piston	Stainless steel	
Rod cover	Aluminum alloy (anodized)	
Y type knuckle, I type knuckle Pivot mounting with supporting bracket	Mild steel (zinc plated)	

Other than the items listed above, they are the same as for the standard Slim Cylinder.

Seals

Note: Seals cannot be replaced.

Parts / Quantity / Bore mm	Rod seal	Lock piston seal	Lock cover gasket
	1	1	1
20	GYH-9	MYN-5	—
25	GYH-11	MYN-5	—
32	—	MYN-10A	S18
40	—	MYN-10A	S18
50	—	MYN-16	S22.4
63	—	MYN-16	S22.4

Other than the items listed above, they are the same as for the standard Slim Cylinder.

Mass

kg [lb.]

Bore size mm [in.]	Zero stroke mass						Additional mass for each 1mm [0.0394in.] stroke	Mass of mounting bracket				
	-HL: Head side end keep			-RL: Rod side end keep				Foot bracket	Flange bracket	Pivot bracket	Y type knuckle	I type knuckle
	Basic type	Short head type	Pivot mounting type	Basic type	Short head type	Pivot mounting type						
20 [0.787]	0.16 [0.35]	0.15 [0.33]	—	0.15 [0.33]	0.14 [0.31]	—	0.0008 [0.0018]	0.14 [0.31]	0.08 [0.18]	0.06 [0.13]	0.042 [0.093]	0.035 [0.077]
25 [0.984]	0.21 [0.46]	0.20 [0.44]	—	1.20 [2.65]	0.19 [0.42]	—	0.0011 [0.0024]	0.16 [0.35]	0.08 [0.18]	0.06 [0.13]	0.075 [0.165]	0.070 [0.154]
32 [1.260]	0.35 [0.77]	0.33 [0.73]	—	0.34 [0.75]	0.32 [0.71]	—	0.0015 [0.0033]	0.19 [0.42]	0.10 [0.22]	0.14 [0.31]		
40 [1.575]	0.53 [1.17]	0.51 [1.12]	—	0.52 [1.15]	0.50 [1.10]	—	0.0024 [0.0053]	0.29 [0.64]	0.13 [0.29]	0.14 [0.31]	0.122 [0.269]	0.132 [0.291]
50 [1.969]	0.99 [2.18]	0.91 [2.01]	0.94 [2.07]	0.96 [2.12]	0.88 [1.94]	0.91 [2.01]	0.0028 [0.0062]	0.55 [1.21]	0.28 [0.62]	0.24 [0.53]		
63 [2.480]	1.32 [2.91]	1.26 [2.78]	1.28 [2.82]	1.29 [2.84]	1.22 [2.69]	1.25 [2.76]	0.0035 [0.0077]	0.73 [1.61]	0.37 [0.82]	0.24 [0.53]		

Calculation example: For head side end keep foot mounting type of 32mm bore size and 100mm stroke
0.35＋0.19＋(0.0015×100)＝0.69kg [1.52lb.]

-HL Dimensions of Head Side End Keep Basic Type (mm)

● φ20～φ40

DAK Bore size × Stroke **-HL**

CAD DAK Bore size -HL

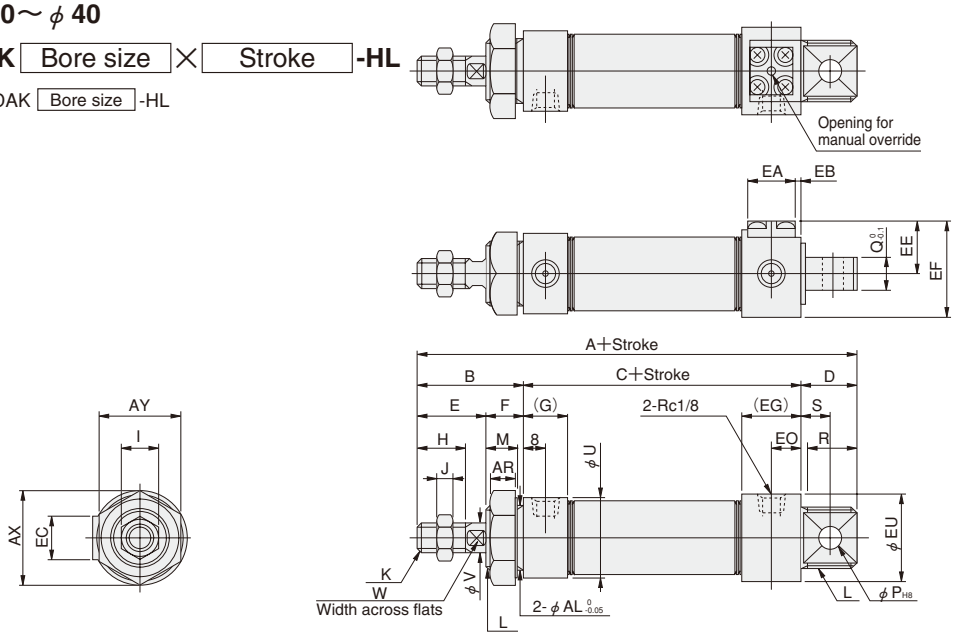

● Short head

DAK Bore size × Stroke **-A-HL**

CAD SLIM-A

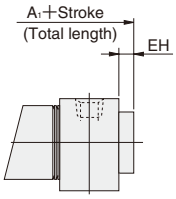

Bore mm [in.] \ Code	A	A1	B	C	D	E	F	G	H	I	J	K	L	M	P	Q	R	S	U	V	W
20 [0.787]	132	117	35	76	21	23	12	16	15	12	5	M8×1	M20×1.5	10	8	12	19	12	27	8	6
25 [0.984]	137	122	40	76	21	26	14	16	18	14	6	M10×1.25	M22×1.5	12	8	12	19	12	29	10	8
32 [1.260]	160	134	45	88	27	31	14	16	23	14	6	M10×1.25	M27×2	12	10	20	25	15	35	12	10
40 [1.575]	165	139	45	93	27	31	14	15	23	19	8	M14×1.5	M33×2	12	10	20	25	15	41.6	16	14

Bore mm [in.] \ Code	AR	AX	AY	AL	EA	EB	EC	EE	EF	EG	EH	EO	EU
20 [0.787]	7.5	31.2	27	20	16	—	16	17.5	32	16	6	8	29
25 [0.984]	9.5	34.6	30	22	16	—	16	18.5	36	16	6	8	35
32 [1.260]	9.5	41.6	36	27	24	2	25	22.5	40.5	26	1	14	35
40 [1.575]	9.5	47.3	41	33	24	4	25	25.5	46	31	1	16	41.6

● φ50, φ63 **DAK** Bore size × Stroke **-HL**

CAD DAK Bore size -HL

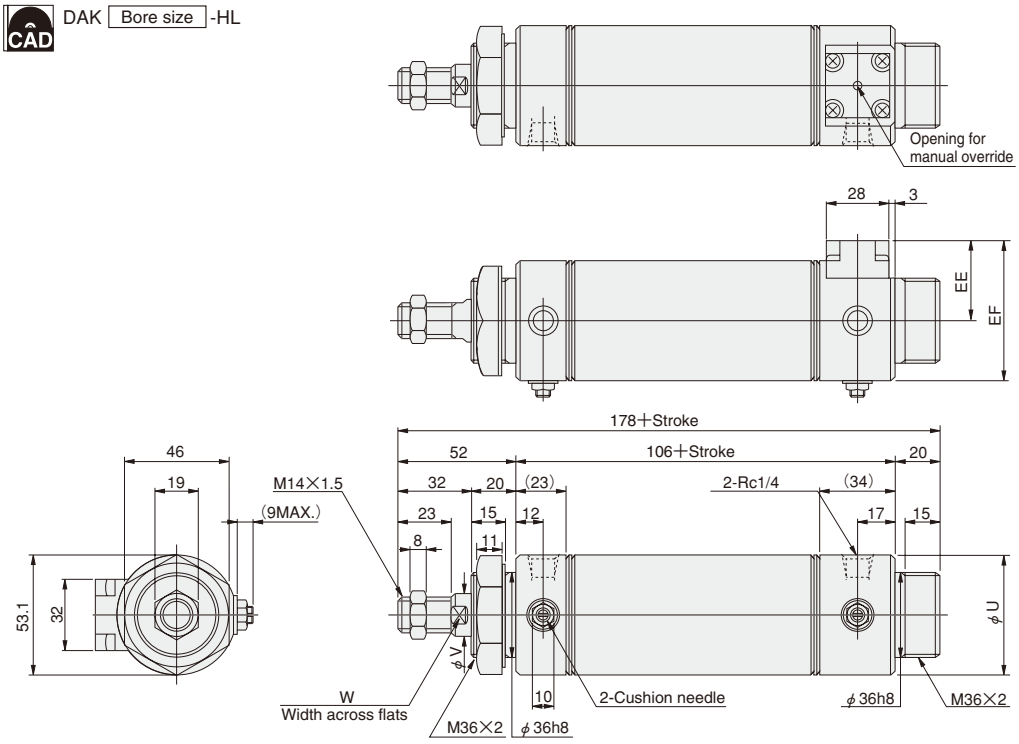

Bore mm [in.] \ Code	U	V	W	EE	EF
50 [1.969]	52	16	14	35.5	61.5
63 [2.480]	65.4	16	14	35.5	68.5

● Short head

DAK Bore size × Stroke **-A-HL**

CAD SLIM-A

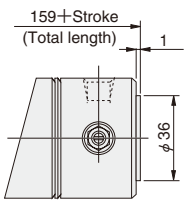

● Pivot mounting type head

DAK Bore size × Stroke **-HL-8B**

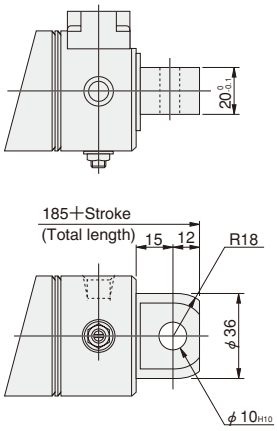

-RL Dimensions of Rod Side End Keep Basic Type (mm)

● φ 20～φ 40

DAK Bore size × Stroke **-RL**

CAD DAK Bore size -RL

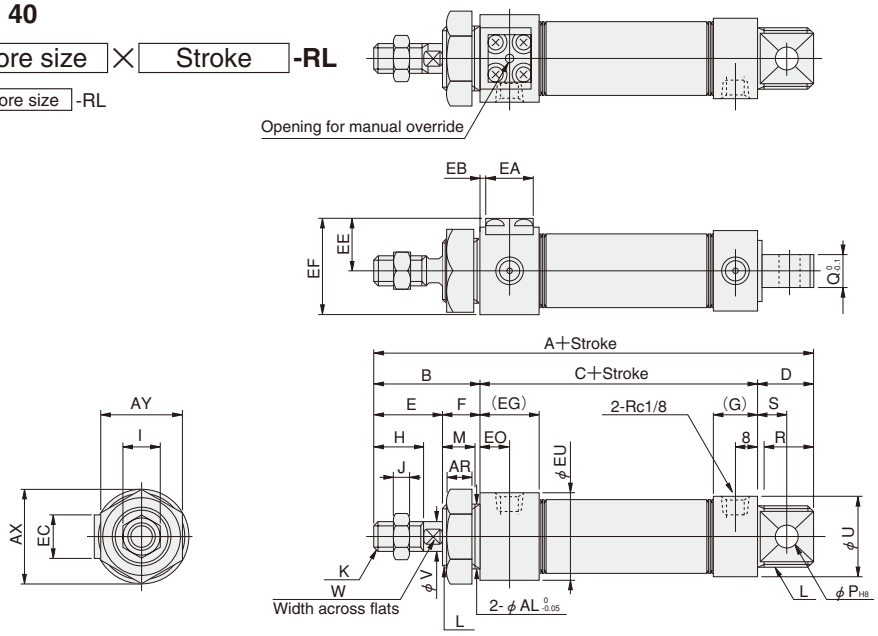

● Short head

DAK Bore size × Stroke **-A-RL**

CAD SLIM-A

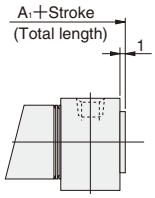

Bore mm [in.] \ Code	A	A1	B	C	D	E	F	G	H	I	J	K	L	M	P	Q	R	S	U	V	W
20 [0.787]	132	112	35	76	21	23	12	16	15	12	5	M8×1	M20×1.5	10	8	12	19	12	27	8	6
25 [0.984]	137	117	40	76	21	26	14	16	18	14	6	M10×1.25	M22×1.5	12	8	12	19	12	29	10	8
32 [1.260]	160	134	45	88	27	31	14	16	23	14	6	M10×1.25	M27×2	12	10	20	25	15	35	12	10
40 [1.575]	165	139	45	93	27	31	14	15	23	19	8	M14×1.5	M33×2	12	10	20	25	15	41.6	16	14

Bore mm [in.] \ Code	AR	AX	AY	AL	EA	EB	EC	EE	EF	EG	EO	EU
20 [0.787]	7.5	31.2	27	20	16	—	16	17.5	32	16	8	29
25 [0.984]	9.5	34.6	30	22	16	—	16	18.5	36	16	8	35
32 [1.260]	9.5	41.6	36	27	24	2	25	22.5	40.5	26	14	35
40 [1.575]	9.5	47.3	41	33	24	4	25	25.5	46	31	16	41.6

● φ 50, φ 63 DAK Bore size × Stroke -RL

CAD DAK Bore size -RL

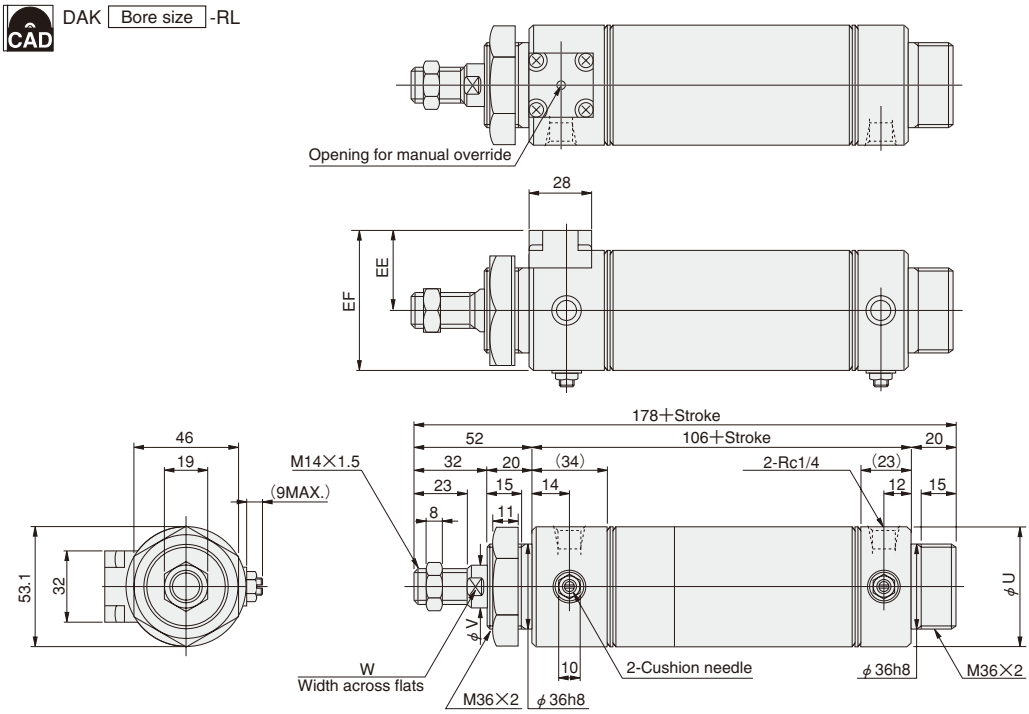

Bore mm [in.] \ Code	U	V	W	EE	EF
50 [1.969]	52	16	14	35.5	61.5
63 [2.480]	65.4	16	14	35.5	68.5

● Short head

DAK Bore size × Stroke **-A-RL**

CAD SLIM-A

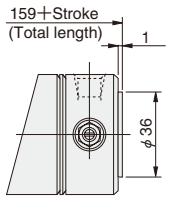

● Pivot mounting type head

DAK Bore size × Stroke **-RL-8B**

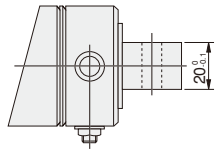

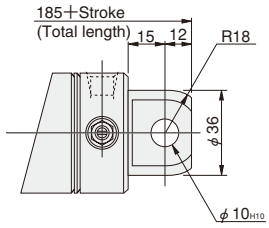

Operating Principle

Keep

When the piston reaches the end of the stroke, and the head side is completely exhausted, spring force causes the lock piston to engage, and automatically keep the end of stroke position.

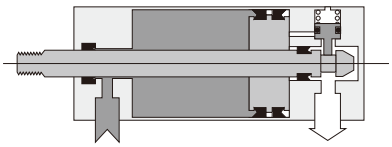

Release

Supplying compressed air to the port on the locking mechanism side pushes up the lock piston and releases the lock. When the lock is released, the by-pass air passage opens to supply compressed air to the piston side.

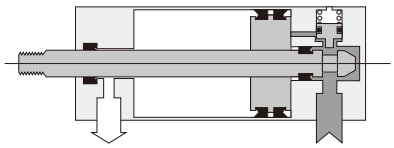

Mounting Location of Sensor Switch

When the sensor switch is mounted in the location shown in the diagram (figures in the table are reference values), the magnet comes to the sensor switch's maximum sensing location at the end of the stroke.

● Air cylinder

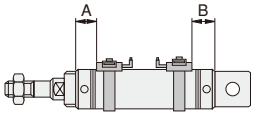

●-HL: Head side end keep

mm [in.]

Sensor switch model	Code \ Bore size	Air cylinder 20 [0.787]	25 [0.984]	32 [1.260]	40 [1.575]	50 [1.969]	63 [2.480]
ZG530□	A	27 [1.063]	27 [1.063]	27 [1.063]	27 [1.063]	36 [1.417]	36 [1.417]
ZG553□	B	27 [1.063]	27 [1.063]	39 [1.535]	44 [1.732]	47 [1.850]	47 [1.850]
CS□M	A	27 [1.063]	27 [1.063]	27 [1.063]	27 [1.063]	36 [1.417]	36 [1.417]
	B	27 [1.063]	27 [1.063]	39 [1.535]	44 [1.732]	47 [1.850]	47 [1.850]
CS□F	A	24 [0.945]	24 [0.945]	24 [0.945]	24 [0.945]	34 [1.339]	34 [1.339]
	B	24 [0.945]	24 [0.945]	38 [1.496]	41 [1.614]	46 [1.811]	46 [1.811]

●-RL: Rod side end keep

mm [in.]

Sensor switch model	Code \ Bore size	Air cylinder 20 [0.787]	25 [0.984]	32 [1.260]	40 [1.575]	50 [1.969]	63 [2.480]
ZG530□	A	27 [1.063]	27 [1.063]	39 [1.535]	44 [1.732]	47 [1.850]	47 [1.850]
ZG553□	B	27 [1.063]	27 [1.063]	27 [1.063]	27 [1.063]	36 [1.417]	36 [1.417]
CS□M	A	27 [1.063]	27 [1.063]	39 [1.535]	44 [1.732]	47 [1.850]	47 [1.850]
	B	27 [1.063]	27 [1.063]	27 [1.063]	27 [1.063]	36 [1.417]	36 [1.417]
CS□F	A	24 [0.945]	24 [0.945]	38 [1.496]	41 [1.614]	46 [1.811]	46 [1.811]
	B	24 [0.945]	24 [0.945]	24 [0.945]	24 [0.945]	34 [1.339]	34 [1.339]

Control circuit

For control of Slim End Keep Cylinders, we recommend the use of 2-position, 4-, 5-port valves. Avoid the use of a control circuit of exhaust centers with 3-position valves or other control circuits that exhaust air from 2 delivery ports.

Notes: 1. It is dangerous to supply air to a connection port on a side with a locking mechanism while already exhausted, because the piston rod could suddenly extend (or retract). In addition, since it could also cause galling of the lock piston and piston rod, resulting in defective operation. Always supply air to the connection port on the opposite side to ensure that back pressure is applied.
2. When restarting operations after air has been exhausted from the cylinder due to completion of operations or to an emergency stop, always start by supplying air to the connection port on the opposite side of the locking mechanism.

Manual operation

While the locking mechanism is normally released automatically through cylinder operations, it can also be released manually. For manual release, insert an M3 × 0.5 (M2.5×0.45 for ϕ16) screw that has 30mm [1.18in.] below head length into the opening for manual override, thread it in about 3 turns into the internal lock piston, and then pull up the screw. To maintain the manual override for adjustment, etc., thread the locknut onto the screw and, with the locking mechanism in a released state, tighten the locknut against the cylinder.

Notes: 1. It is dangerous to release the lock when a load (weight) is present on the piston rod, because it may cause a sudden fall or cause the unintended piston rod's extension (or retraction). In this case, always supply air to the connection port opposite the one adjacent to the locking mechanism before releasing the locking mechanism.
2. If the locking mechanism cannot easily be released even with manual override, it could be the result of galling of the lock piston and piston rod. In this case, supply air to the connection port opposite the one adjacent to the locking mechanism before releasing the locking mechanism.

General precautions

Media

1. Use air for the media. For the use of any other media, consult us.
2. Air used for the cylinder should be clean air that contains no deteriorated compressor oil, etc. Install an air filter (filtration of a minimum 40 μm) near the cylinder or valve to remove collected liquid or dust. In addition, drain the air filter periodically.
   Collected liquid or dust entering the cylinder may cause improper operation.

Lubrication

The product can be used without lubrication, if lubrication is required, use Turbine Oil Class 1 (ISO VG32) or equivalent.
Avoid using spindle oil or machine oil.

Atmosphere

1. Because water, oil, dust, etc., entering the opening for manual override may cause defective locks or other erratic operation. If using in locations subject to dripping water, dripping oil etc., or to large amounts of dust, use a cover to protect the unit.
2. The product cannot be used when the media or ambient atmosphere contains any of the substances listed below.
   Organic solvents, phosphate ester type hydraulic oil, sulphur dioxide, chlorine gas, or acids, etc.

SLIM BRAKE CYLINDERS

Symbol

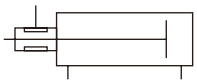

Specifications

Item		Bore size mm [in.]	20 [0.787]	25 [0.984]	32 [1.260]	40 [1.575]
Media			Air			
Proof pressure		MPa [psi.]	1.32 [191]			
Operating temperature range		°C [°F]	5～60 [41～140]			
Operating speed range		mm/s [in./sec.]	50～500 [2.0～19.7]			
Cylinder section	Operation type		Double acting type			
	Mounting type		Basic type, Foot type, Flange type, Pivot type, Head trunnion type			
	Operating pressure range	MPa [psi.]	0.08～0.9 [12～131]			
	Cushion		Fixed type (Rubber bumper)			
	Lubrication		Not required			
	Port size	Rc	1/8			
Brake section	Operation type		Spring, spring assisted air pressure type Note1			
	Operating pressure range (When air is applied to brake port)	MPa [psi.]	0.3～0.9 [44～131] (0.34～0.5 [49～73])			
	Lubrication		Prohibited Note2			
	Retaining force (When pneumatic lock is pressurized to 0.4Mpa. [58psi.])	N [lbf.]	156.9 [35.27] (245.2 [55.12])	245.2 [55.12] (392.3 [88.19])	392.3 [88.19] (617.8 [138.9])	617.8 [138.9] (980.7 [220.5])
	Allowable kinetic energy of lock	J [ft·lbf]	0.265 [0.195]	0.422 [0.311]	0.696 [0.513]	1.187 [0.875]
	Repeatability (When air is applied to brake port)	mm [in.]	±1 [0.039] (±0.5 [0.020]) Note3			
	Port size	Rc	1/8			

Notes: 1. The body is for common use. For details, see the Handling Instructions and Precautions on p.369.
2. Do not use lubrication.
3. For the case where cylinder speed is 300mm [11.8in./sec.], pressure is 0.5MPa [73psi.], and the load ratio is 25%. For details, see the Handling Instructions and Precautions on p.369.

Bore Size and Strokes

mm

Bore size	Standard strokes	Maximum stroke		Maximum available stroke	
		No bellows	With bellows	No bellows	With bellows
20	25 50 75 100 125 150	200		1050	740
25	25 50 75 100 125 150 200	250			
32	25 50 75 100 125 150 200	300			
40	25 50 75 100 125 150 200 250 300	400	300		

Remarks: 1. Stroke tolerance $^{+1}_{0}$ [$^{+0.039in.}_{0}$]
2. For non-standard strokes, consult us.
3. The minimum operating pressure when the stroke is over the maximum stroke is 0.2MPa [29psi.].

Order Codes

DA □ **R** **20×50** – □ – □ – □ – □ □ □

Slim double acting cylinder

Bellows
Blank — No bellows
J —— With bellows (Made to order)

Brake cylinder

Bore size × Stroke

Head cover specification
Blank — Standard head
A —— Short head

Mounting type
Blank — Basic type
1 —— Foot mounting type
3 —— Flange mounting type
8E —— Pivot mounting type with supporting bracket (with pin)
11 —— Head trunnion type
11-11T —— Head trunnion type with supporting bracket
● Mounting brackets are included at shipping.

Rod end accessory
Blank — No rod end accessory
I —— I type knuckle
Y —— Y type knuckle (with pin)
● For the cylinder joint and cylinder rod end, see p.1568.

Sensor switch (for cylinders with sensor switches)

Blank	No sensor switch		
ZG530	2-lead wire Solid state type	with indicator lamp	DC10～28V
ZG553	3-lead wire Solid state type	with indicator lamp	DC4.5～28V
CS3M	Reed switch type	with indicator lamp	DC10～30V AC85～230V
CS4M	Reed switch type	with indicator lamp	DC10～30V AC85～115V
CS5M	Reed switch type	without indicator lamp	DC3～30V AC85～115V
CS2F	Reed switch type	with indicator lamp	AC85～230V
CS3F	Reed switch type	with indicator lamp	DC10～30V
CS4F	Reed switch type	with indicator lamp	DC10～30V
CS5F	Reed switch type	without indicator lamp	DC3～30V

● For details of sensor switches, see p.1544.
● **CS□F** comes with DIN connector. All others are grommet type.

Lead wire length (Applies to all except **CS□F**)
A —— 1000mm [39in.]
B —— 3000mm [118in.]

Number of sensor switches
1 —— With 1 sensor switch
2 —— With 2 sensor switches
3 —— With 3 sensor switches
⋮ ⋮

Inner Construction (cannot be disassembled)

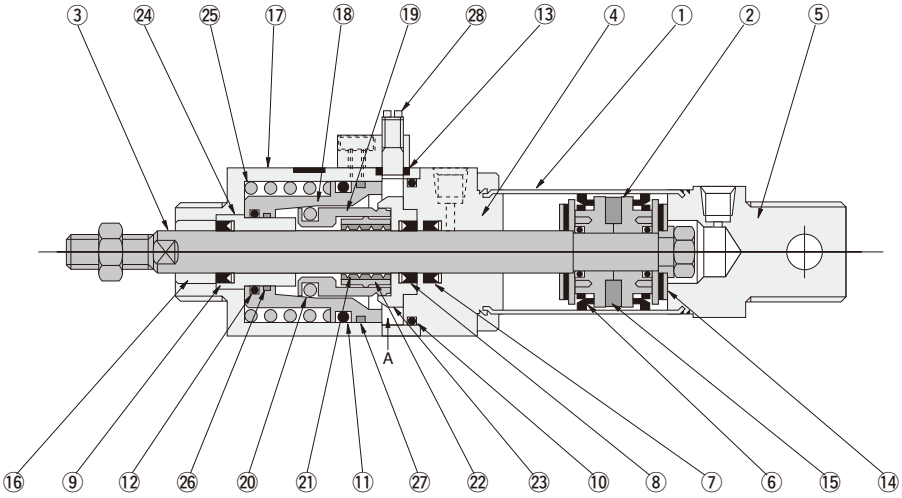

The diagram shows the brake release state.

Major Parts and Materials

No.	Parts	Materials
①	Cylinder tube	Stainless steel
②	Piston	Plastic
③	Piston rod	Steel (hard chrome plated)
④	Rod cover	Aluminum (anodized)
⑤	Head cover	
⑥	Piston seal	Synthetic rubber (NBR)
⑦～⑨	Rod seal	
⑩～⑬	O-ring	
⑭	Bumper	
⑮	Magnet	Plastic magnet
⑯	Rod bushing	Oil impregnated bronze sintered alloy
⑰	Brake head	Aluminum (anodized)
⑱	Brake piston	Special steel (heat-treated)
⑲	Collet	
⑳	Steel ball	High carbon steel
㉑	Brake shoe	Special brake lining (copper sintered material)
㉒	Brake shoe holder	Special steel (heat-treated)
㉓	Holder	
㉔	Guide	Aluminum alloy
㉕	Spring	Piano wire (zinc plated)
㉖～㉗	Wear ring	Plastic
㉘	Brake release screw	Mild steel (zinc plated)
	Bellows	Nylon tarpaulin (heat resistant temperature 60°C)

Operating Principle

Brake operation

When air is exhausted from chamber A, brake piston ⑱ is moved by spring ㉕ to the right, steel ball ⑳ in contact with the tapered section inside of brake piston ⑱ is pushed to the inner side, and collet ⑲ works as a lever with holder ㉓ and brake shoe holder ㉒ as a pivot point. This action presses brake shoe ㉑ to tighten the piston rod and activate the brake.

Brake release

When air is supplied to chamber A, brake piston ⑱ moves to the left against spring ㉕, steel ball ⑳ is separated from the tapered section inside of brake piston ⑱, and collet ⑲ expands and brake shoe ㉑ spreads to release the piston rod and disengage the brake.

Seals

Note: Seals cannot be replaced.

Parts / Bore \ Quantity	Rod seal ⑦～⑨	Piston seal ⑥	O-ring ⑩	O-ring ⑪	O-ring ⑫	O-ring ⑬
	3	2	1	1	1	1
20	NY-12×8×3.5	PPY-20	L090102	P21	P12	P5
25	NY-14×10×3.5	PPY-25	S26	P24	P14	P5
32	NY-17×12×4	PPY-32	S34	P32	P18	P6
40	NY-22×16×5	PPY-40	S42	P40	P22	P6

Mass

kg [lb.]

Bore size mm [in.]	Zero stroke mass			Additional mass for each 1mm [0.0394in.] stroke	Mass of mounting bracket		
	Standard head type	Short head type	Trunnion type		Foot mounting type	Flange mounting type	Clevis mounting type
20 [0.787]	0.37 [0.82]	0.36 [0.79]	0.56 [1.23]	0.0008 [0.0018]	0.14 [0.31]	0.08 [0.18]	0.06 [0.13]
25 [0.984]	0.54 [1.19]	0.53 [1.17]	0.72 [1.59]	0.0011 [0.0024]	0.16 [0.35]	0.08 [0.18]	0.06 [0.13]
32 [1.260]	0.84[1.85]	0.82 [1.81]	1.01 [2.23]	0.0015 [0.0033]	0.19 [0.42]	0.10 [0.22]	0.14 [0.31]
40 [1.575]	1.30 [2.87]	1.28 [2.82]	1.48 [3.26]	0.0024 [0.0053]	0.29 [0.64]	0.13 [0.29]	0.14 [0.31]

Dimensions of Brake Cylinder Basic Type (mm)

DAR Bore size × Stroke

CAD DAR- Bore size

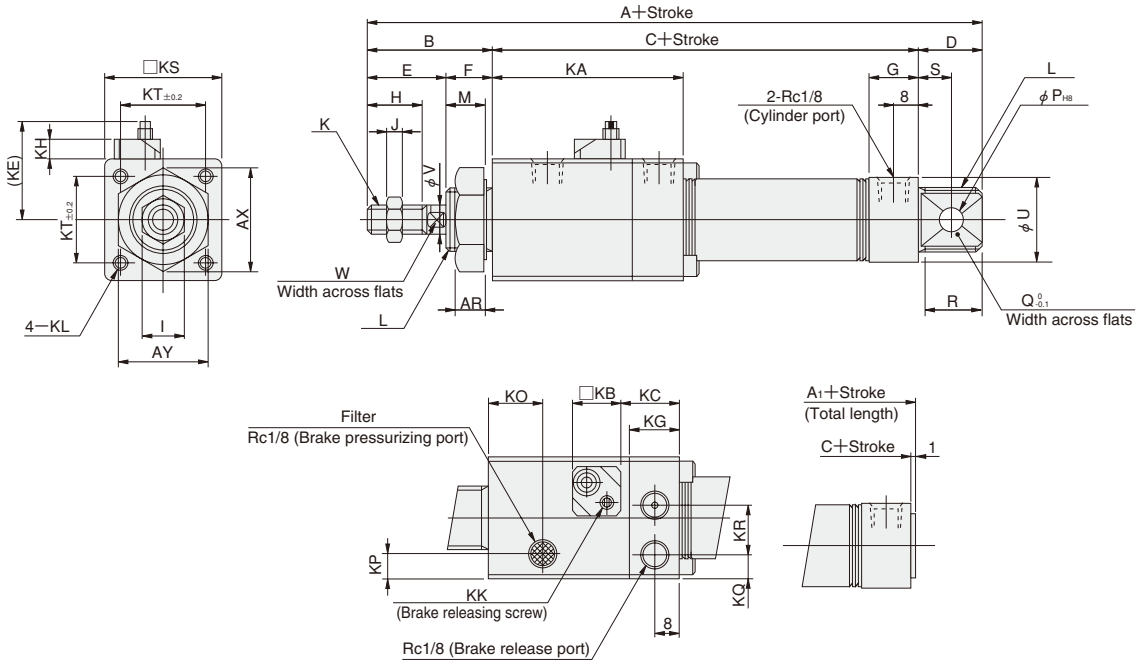

Brake head section

●Short head

DAR Bore size × Stroke **-A**

CAD SLIM-A

Bore mm [in.] \ Code	A	A1	B	C	D	E	F	G	H	I	J	K	L	M	P	Q	R	S	U	V	W	AR	AX	AY
20 [0.787]	175	155	35	119	21	23	12	16	15	12	5	M8×1	M20×1.5	10	8	12	19	12	27	8	6	7.5	31.2	27
25 [0.984]	184	164	40	123	21	26	14	16	18	14	6	M10×1.25	M22×1.5	12	8	12	19	12	29	10	8	9.5	34.6	30
32 [1.260]	202	176	45	130	27	31	14	16	23	14	6	M10×1.25	M27×2	12	10	20	25	15	35	12	10	9.5	41.6	36
40 [1.575]	217	191	45	145	27	31	14	(14.5)	23	19	8	M14×1.5	M33×2	12	10	20	25	15	41.6	16	14	9.5	47.3	41

Bore mm [in.] \ Code	KA	KB	KC	KE	KG	KH	(KK)	KL		KO	KP	KQ	KR	KS	KT
20 [0.787]	59	16	19	29	16	6.5	M5×0.8	M5×0.8	Depth7	16.5	7	7	14.5	35	26
25 [0.984]	63	16	19.5	32	16	6.5	M5×0.8	M5×0.8	Depth9	18	8	8	16	40	28
32 [1.260]	70	20	19	38	16	9	M6×1	M5×0.8	Depth9	23	8	14.5	16	45	34
40 [1.575]	83	20	20	40	16	9	M6×1	M6×1	Depth10	27	9	18	16	52	40

Dimensions of Brake Cylinder Foot Mounting Type (mm)

DAR Bore size × Stroke **-1**

CAD DAR- Bore size
SLIM-F01

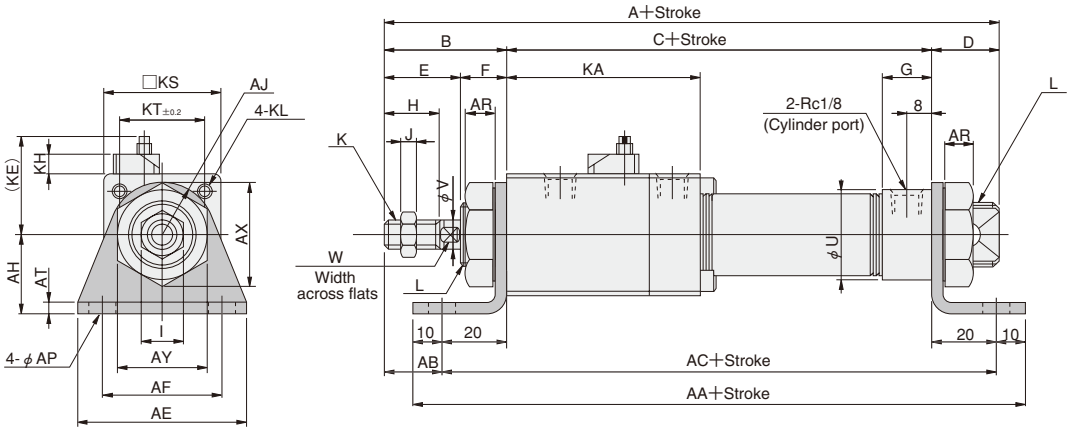

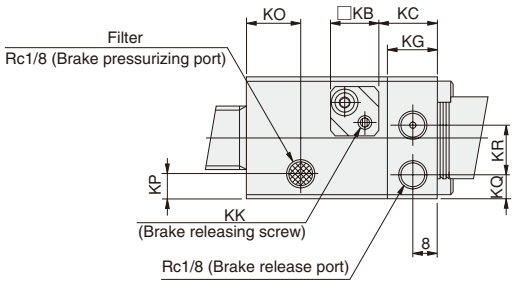

Brake head section

Code / Bore mm [in.]	A	B	C	D	E	F	G	H	I	J	K	L	U	V	W
20 [0.787]	175	35	119	21	23	12	16	15	12	5	M8×1	M20×1.5	27	8	6
25 [0.984]	184	40	123	21	26	14	16	18	14	6	M10×1.25	M22×1.5	29	10	8
32 [1.260]	202	45	130	27	31	14	16	23	14	6	M10×1.25	M27×2	35	12	10
40 [1.575]	217	45	145	27	31	14	(14.5)	23	19	8	M14×1.5	M33×2	41.6	16	14

Code / Bore mm [in.]	KA	KB	KC	KE	KG	KH	(KK)	KL	KO	KP	KQ	KR	KS	KT
20 [0.787]	59	16	19	29	16	6.5	M5×0.8	M5×0.8 Depth7	16.5	7	7	14.5	35	26
25 [0.984]	63	16	19.5	32	16	6.5	M5×0.8	M5×0.8 Depth9	18	8	8	16	40	28
32 [1.260]	70	20	19	38	16	9	M6×1	M5×0.8 Depth9	23	8	14.5	16	45	34
40 [1.575]	83	20	20	40	16	9	M6×1	M6×1 Depth10	27	9	18	16	52	40

Code / Bore mm [in.]	AA	AB	AC	AE	AF	AH	AJ	AP	AR	AT	AX	AY
20 [0.787]	179	15	159	55	40	25	15.5	6.8	7.5	3.2	31.2	27
25 [0.984]	183	20	163	55	40	30	17	6.8	9.5	3.2	34.6	30
32 [1.260]	190	25	170	55	40	35	20	6.8	9.5	3.2	41.6	36
40 [1.575]	205	25	185	75	55	40	23.5	9	9.5	4	47.3	41

Dimensions of Brake Cylinder Flange Mounting Type (mm)

● ϕ 20～ϕ 25 **DAR** Bore size × Stroke **-3**

CAD DAR- Bore size SLIM-FL3

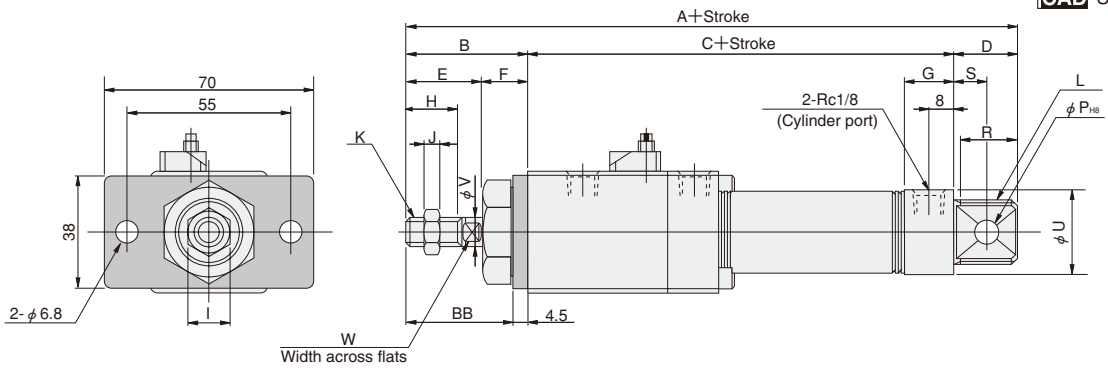

● ϕ 32～ϕ 40

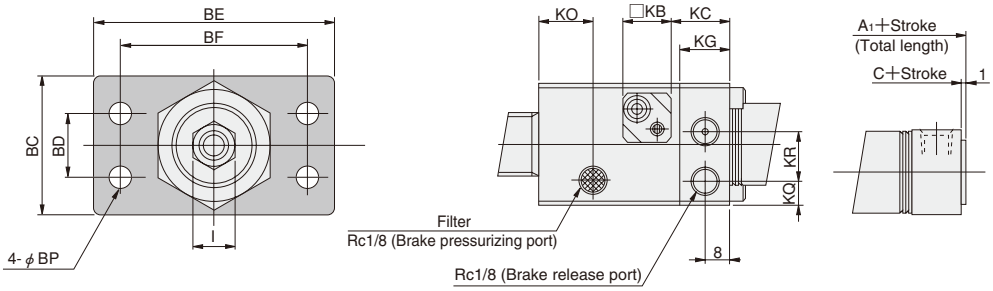

Brake head section

● **Short head**

DAR Bore size × Stroke **-A-3**

CAD SLIM-A

Bore mm [in.] \ Code	A	A1	B	C	D	E	F	G	H	I	J	K	L	P	R	S	U	V	W
20 [0.787]	175	155	35	119	21	23	12	16	15	12	5	M8×1	M20×1.5	8	19	12	27	8	6
25 [0.984]	184	164	40	123	21	26	14	16	18	14	6	M10×1.25	M22×1.5	8	19	12	29	10	8
32 [1.260]	202	176	45	130	27	31	14	16	23	14	6	M10×1.25	M27×2	10	25	15	35	12	10
40 [1.575]	217	191	45	145	27	31	14	(14.5)	23	19	8	M14×1.5	M33×2	10	25	15	41.6	16	14

Bore mm [in.] \ Code	BB	BC	BD	BE	BF	BP	KQ	KR	KO	KB	KC	KG
20 [0.787]	30.5	—	—	—	—	—	7	14.5	16.5	16	19	16
25 [0.984]	35.5	—	—	—	—	—	8	16	18	16	19.5	16
32 [1.260]	40.5	45	20	80	60	6.8	14.5	16	23	20	19	16
40 [1.575]	40.5	50	30	100	80	9	18	16	27	20	20	16

Dimensions of Brake Cylinder Pivot Mounting Type (mm)

DAR Bore size × Stroke **-8E**

CAD DAR- Bore size
SLIM-CL7

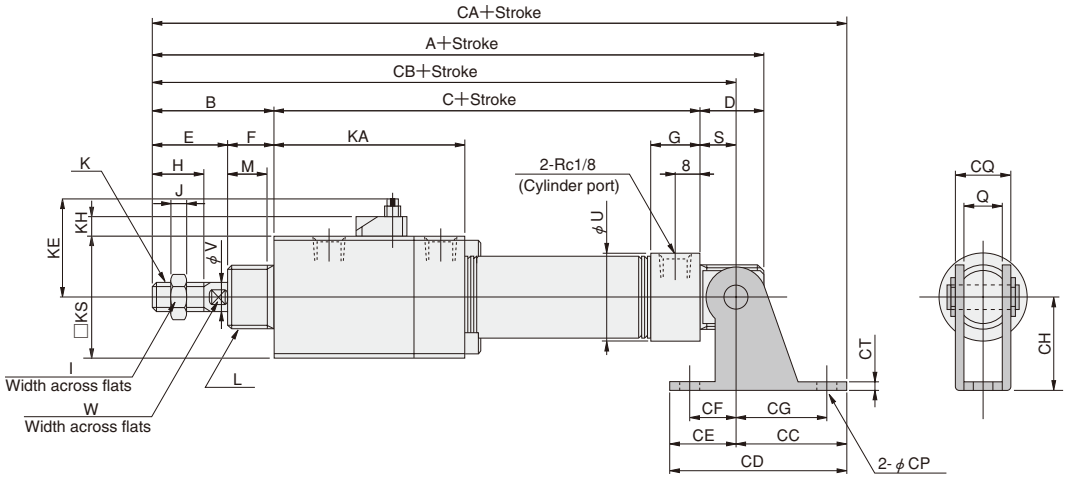

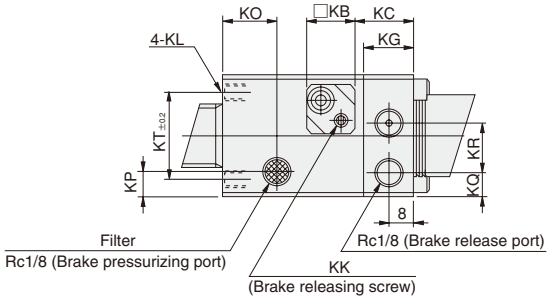

Brake head section

Bore mm [in.] / Code	A	B	C	D	E	F	G	H	I	J	K	L	M	Q	S	U	V	W
20 [0.787]	175	35	119	21	23	12	16	15	12	5	M8×1	M20×1.5	10	12	12	27	8	6
25 [0.984]	184	40	123	21	26	14	16	18	14	6	M10×1.25	M22×1.5	12	12	12	29	10	8
32 [1.260]	202	45	130	27	31	14	16	23	14	6	M10×1.25	M27×2	12	20	15	35	12	10
40 [1.575]	217	45	145	27	31	14	(14.5)	23	19	8	M14×1.5	M33×2	12	20	15	41.6	16	14

Bore mm [in.] / Code	KA	KB	KC	KE	KG	KH	(KK)	KL	KO	KP	KQ	KR	KS	KT
20 [0.787]	59	16	19	29	16	6.5	M5×0.8	M5×0.8 Depth7	16.5	7	7	14.5	35	26
25 [0.984]	63	16	19.5	32	16	6.5	M5×0.8	M5×0.8 Depth9	18	8	8	16	40	28
32 [1.260]	70	20	19	38	16	9	M6×1	M5×0.8 Depth9	23	8	14.5	16	45	34
40 [1.575]	83	20	20	40	16	9	M6×1	M6×1 Depth10	27	9	18	16	52	40

Bore mm [in.] / Code	CA	CB	CC	CD	CE	CF	CG	CH	CP	CQ	CT
20 [0.787]	203	166	37	59	22	15	30	30	6.8	18.4	3.2
25 [0.984]	212	175	37	59	22	15	30	30	6.8	18.4	3.2
32 [1.260]	240	190	50	75	25	15	40	40	9	28	4
40 [1.575]	255	205	50	75	25	15	40	40	9	28	4

Dimensions of Brake Cylinder Head Trunnion Type (mm)

DAR Bore size × Stroke **-11-11T**

CAD DAR- Bore size SLIM-TR

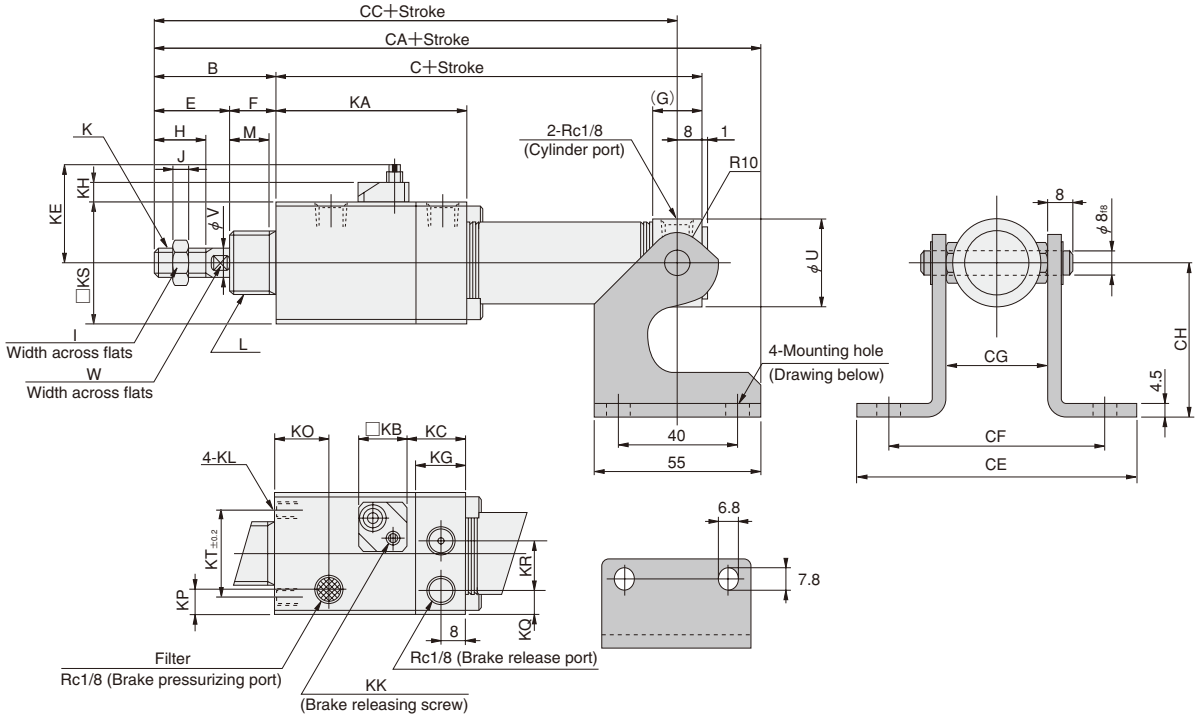

Brake head section

Bore mm [in.] \ Code	B	C	E	F	G	H	I	J	K	L	M	U	V	W
20 [0.787]	35	119	23	12	16	15	12	5	M8×1	M20×1.5	10	27	8	6
25 [0.984]	40	123	26	14	16	18	14	6	M10×1.25	M22×1.5	12	29	10	8
32 [1.260]	45	130	31	14	16	23	14	6	M10×1.25	M27×2	12	35	12	10
40 [1.575]	45	145	31	14	(14.5)	23	19	8	M14×1.5	M33×2	12	41.6	16	14

Bore mm [in.] \ Code	KA	KB	KC	KE	KG	KH	(KK)	KL	KO	KP	KQ	KR	KS	KT
20 [0.787]	59	16	19	29	16	6.5	M5×0.8	M5×0.8 Depth7	16.5	7	7	14.5	35	26
25 [0.984]	63	16	19.5	32	16	6.5	M5×0.8	M5×0.8 Depth9	18	8	8	16	40	28
32 [1.260]	70	20	19	38	16	9	M6×1	M5×0.8 Depth9	23	8	14.5	16	45	34
40 [1.575]	83	20	20	40	16	9	M6×1	M6×1 Depth10	27	9	18	16	52	40

Bore mm [in.] \ Code	CA	CE	CF	CG	CH	CC
20 [0.787]	173.5	92	72	32	50	146
25 [0.984]	182.5	94	74	34	50	155
32 [1.260]	194.5	100	80	40	50	167
40 [1.575]	209.5	107	87	47	50	182

Dimensions of Brake Cylinder with Bellows (mm)

CAD SLIM-J

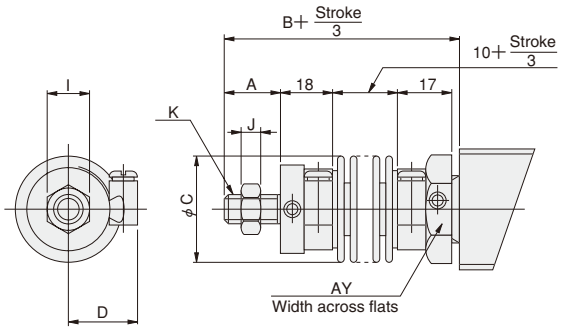

Bore mm [in.] \ Code	A	B	C	D	AY	I	J	K
20 [0.787]	15	63	35	23	27	12	5	M8×1
25 [0.984]	18	66	35	23	30	14	6	M10×1.25
32 [1.260]	23	71	40	26	36	14	6	M10×1.25
40 [1.575]	23	71	48	29	41	19	8	M14×1.5

Mounting and piping

Control circuit

Electric control

When using a sequencer for control, the scanning time of the sequencer will affect the stopping position error. To improve the stopping position accuracy, use a TTL circuit, etc., to directly control the signal from the cylinder's sensor switch, and operate the valve.

Pneumatic circuit

1. To achieve a balance with the load, and a balance of differences in rod diameter area, always use a regulator with check valve. Regulators we recommend include the F.R.L. multi series **R152**, the manifold regulator **MR102**, or the solenoid valve 180 series sub-base regulator -54 (for single unit order code: **M020014**).
2. For the cylinder control solenoid valve (V1), use a pressure center type 3-position solenoid valve (**113-4E2-14**, **183-4E2-14**), etc.
3. Install the solenoid valve for brake (V2) as close to the cylinder as possible. Moreover, using a DC current solenoid valve will improve response (repeatability).

Standard circuit

● Horizontal mounting
Spring lock

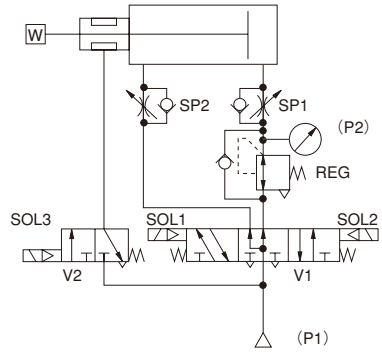

Spring assisted air pressure lock

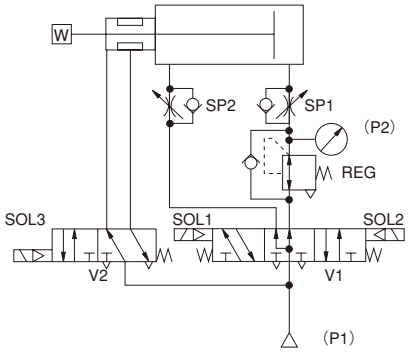

Regulator pressure setting

$$P2=\frac{D^2-d^2}{D^2}\cdot P1$$

D	: Cylinder bore	(mm)
d	: Rod diameter	(mm)
P1	: Supply pressure	(MPa)

$$P2'=\frac{D'^2-d'^2}{D'^2}\cdot P1'$$

D′	: Cylinder bore	[in.]
d′	: Rod diameter	[in.]
P1′	: Supply pressure	[psi.]

● Vertical mounting
Spring lock

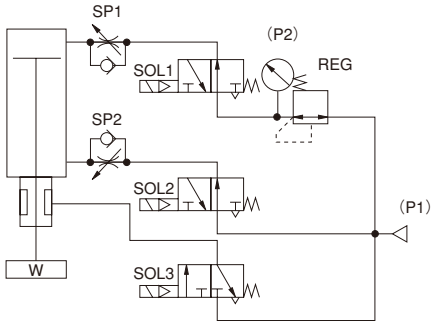

Spring assisted air pressure lock

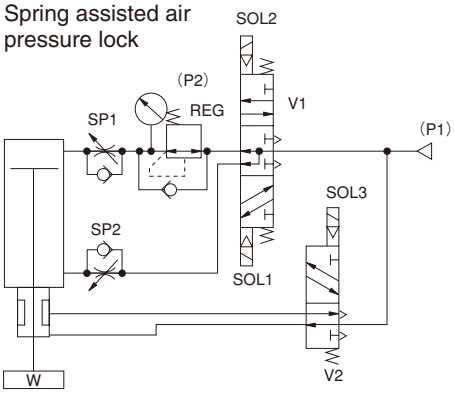

Regulator pressure setting

$$P2=\frac{\pi\,(D^2-d^2)P1-4W}{\pi\cdot D^2}$$

D	: Cylinder bore	(mm)
d	: Rod diameter	(mm)
P1	: Supply pressure	(MPa)
W	: Load	(N)

$$P2'=\frac{\pi\,(D'^2-d'^2)P1'-4W'}{\pi\cdot D'^2}$$

D′	: Cylinder bore	[in.]
d′	: Rod diameter	[in.]
P1′	: Supply pressure	[psi.]
W′	: Load	[lbf]

● Vertical mounting (push up)
spring assisted air pressure lock

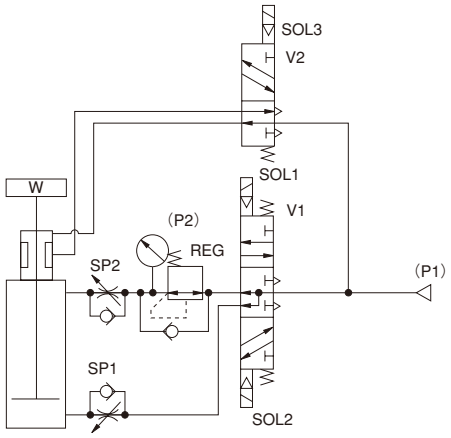

Regulator pressure setting

$$P2=\frac{\pi\cdot D^2\cdot P1-4W}{\pi\,(D^2-d^2)}$$

D	: Cylinder bore	(mm)
d	: Rod diameter	(mm)
P	: Supply pressure	(MPa)
W	: Load	(N)

$$P2'=\frac{\pi\cdot D'^2\cdot P1'-4W'}{\pi\,(D'^2-d'^2)}$$

D′	: Cylinder bore	[in.]
d′	: Rod diameter	[in.]
P′	: Supply pressure	[psi.]
W′	: Load	[lbf]

Solenoid ON, OFF switching sequence
(same for all applications)

Valve / Operating status	V1		V2
	SOL1	SOL2	SOL3
Intermediate stop	OFF	OFF	OFF
Extend	OFF	ON	ON
Retract	ON	OFF	ON

Mounting and piping

Brake mechanism

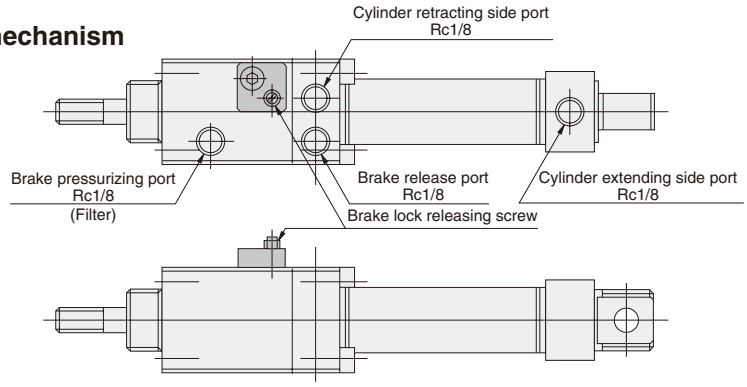

Manual operation

- Brake release
  Apply 0.3～0.9MPa [44～131psi.] air pressure to the brake release port, then use a small screwdriver, etc., to thread the brake lock releasing screw in the clockwise direction until the screw thread disappears.
- Brake operation
  To again operate the brake, apply 0.3～0.9MPa [44～131psi.] air pressure to the brake release port, then use a small screwdriver, etc., to return the brake lock releasing screw in the counterclockwise direction until the screw comes to a stop.
- Brake release
  For safety, the brake lock releasing screw is designed to be immovable if no air has been applied to the brake release port.

Spring assisted air pressure lock

- To increase the holding force, use a screwdriver, etc., to remove the filter on the brake pressurizing port and use it as a connection port for spring assisted air pressure type brake.
- While using a spring assisted air pressure brake will approximately double the holding force, too much pressure on the brake pressurizing port could reduce the durability of the brake mechanism. For this reason, always maintain air pressure in the pressurizing port within a range of 0.34～0.50MPa [49～73psi.] when using a 4 way valve to switch between the brake release port and the pressurizing port.

Stopping position accuracy

1. Stopping position accuracy (repeatability) shown in the specifications table is for initial conditions. This can change over time as the piston rod grease deteriorates, and as wear on the brake shoe and piston rod progresses.
2. The stopping position accuracy can vary in accordance with cylinder speed, control circuit delay time (sequencer scanning time, etc.), fluctuation in brake valve (V2) operating time, piping length, and piping diameter, etc.
3. To improve the stopping position accuracy, install a pressure reducing valve to ensure there are no pressure fluctuations in the media.
4. Use the brake cylinder within the allowable kinetic energy range.

- Fluctuations in cylinder stopping time arising during the sequencer's scanning time (or circuit operating time).

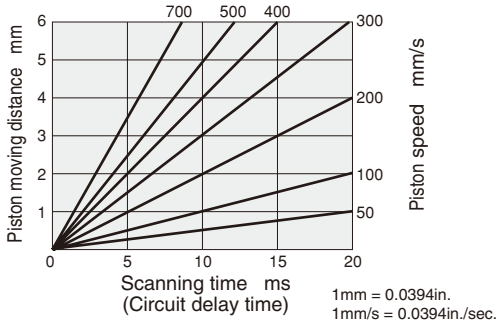

Examples: 1. A brake cylinder operated at a scanning time of 10ms (which will vary according to the sequencer and the number of program steps) and a cylinder speed of 300mm/s [11.8in./sec.] will cause a fluctuation of 3mm [0.118in.].
2. When 10ms is required for the response time of relays, etc., at least 3mm [0.118in.] of operating distance is required for the sensor.
(When the cylinder speed is 300mm/s [11.8 in./sec.])

- Allowable kinetic energy when locked

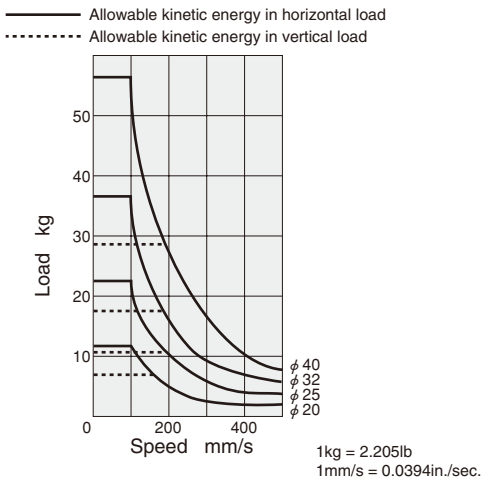

Note: Use the brake cylinder within the allowable kinetic energy range.

Handling Instructions and Precautions

Sensor switch mounting location

For moving sensor switch, see p.419.
Since dimensions for the mounting location will vary, see the table below.

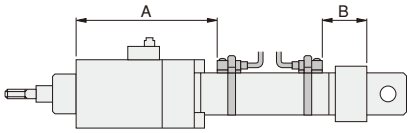

● Mounting location of end of stroke detection sensor switch

Sensor switch model \ Bore size mm [in.]		20 [0.787]	25 [0.984]	32 [1.260]	40 [1.575]
ZG530□	A	70 [2.756]	74 [2.913]	81 [3.189]	95 [3.740]
	B	27 [1.063]	27 [1.063]	27 [1.063]	27 [1.063]
ZG553□	A	70 [2.756]	74 [2.913]	81 [3.189]	95 [3.740]
	B	27 [1.063]	27 [1.063]	27 [1.063]	27 [1.063]
CS□M	A	70 [2.756]	74 [2.913]	81 [3.189]	95 [3.740]
	B	27 [1.063]	27 [1.063]	27 [1.063]	27 [1.063]
CS□F	A	65 [2.559]	69 [2.717]	76 [2.992]	90 [3.543]
	B	22 [0.866]	22 [0.866]	22 [0.866]	22 [0.866]

General precautions

Media

1. Air used in the brake cylinder should be clean air that contains no lubrication. Use of lubrication or humidified air could cause the grease inside the braking mechanism to wash out, which could later result in rapid wear on the braking mechanism caused by the consequent shortage of lubrication, etc.
2. Air used for the cylinder should be clean air that contains no deteriorated compressor oil, etc. Install an air filter (filtration of a minimum 40 μm) near the cylinder or valve to remove collected liquid or dust. In addition, drain the air filter periodically. Collected liquid or dust entering the cylinder may cause improper operation.

Maintenance

If the above basic precautions are observed, the brake cylinder can be used maintenance-free for a long period of time.

Atmosphere

1. If using in locations subject to dripping water, dripping oil, etc., or to large amounts of dust, use a cover to protect the unit.
2. The product cannot be used when the media or ambient atmosphere contains any of the substances listed below.
   Organic solvents, phosphate ester type hydraulic oil, sulphur dioxide, chlorine gas, or acids, etc.

Application Examples

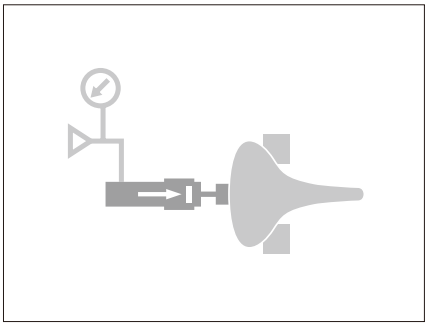

The piston rod locking

Use low pressure to press down cathode-ray tubes, etc., and then lock.
[To hold in place glass products, plastic, and other easily deformable items.]

● Cathode-ray tube manufacturing line
● Injection machine peripheral devices
● Tire production line

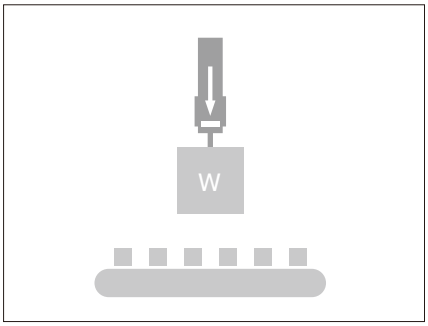

Prevention of falls in intermediate positions

The load is locked in place to prevent damage to work, etc., even when air pressure drops suddenly due to power failures, etc.
[Used for working operations which are set in intermediate positions.]

● Pick and place
● FMS (multi-item, small-lot production) conveyor line
● Automatic packaging machine

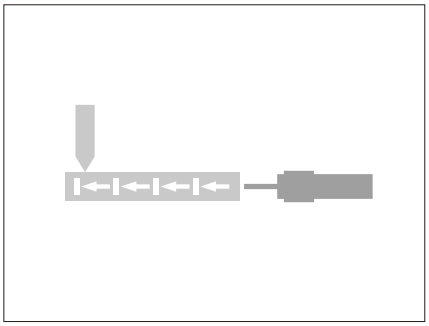

Multi-point operations

Spot welding at multiple points.

Workpiece switching

Select the products, and classify into several categories.

Fixture replacement

Move fixture to desired device.

● Spot welding machine
● Metal mold exchange
● Automatic chuck exchange

SLIM BLOCK CYLINDERS

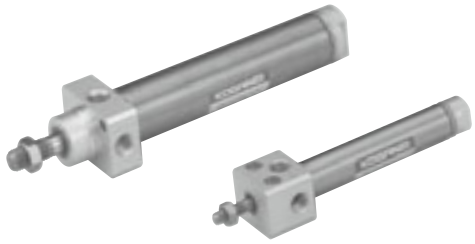

Symbol

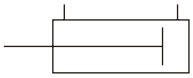

Specifications

Item / Bore size mm [in.]	16 [0.630]	20～40 [0.787～1.575]	50, 63 [1.969, 2.480]
Operation type	Double acting type		
Media	Air		
Mounting type	Side mount, Front mount		
Operating pressure range MPa [psi.]	0.04～0.9 [6～131]		0.04～0.7 [6～102]
Proof pressure MPa [psi.]	1.32 [191]		1.03 [149]
Operating temperature range °C [°F]	0～70 [32～158]		
Operating speed range mm/s [in./sec.]	30～700 [1.2～27.6]		30～500 [1.2～19.7]
Cushion	Fixed type (Rubber bumper)		Variable type (Stroke15mm [0.59in.])
Lubrication	Not required		
Port size Rc	1/8		1/4

Bore Size and Stroke

mm

Bore size	Standard strokes	Maximum stroke	Maximum available stroke
16	15 25 50 75 100	100	300
20	25 50 75 100 125 150	150	500
25	25 50 75 100 125 150 200	200	
32	25 50 75 100 125 150 200	200	
40	25 50 75 100 125 150 200 250 300	300	
50	25 50 75 100 150 200 250 300	300	
63	25 50 75 100 150 200 250 300	300	

Remarks: 1. Stroke tolerance $^{+1}_{0}$ [$^{+0.039in.}_{0}$]
2. For non-standard strokes, consult us.

Order Codes

DA B □ 50×100 – □ – □ – □ – □ □ □

Bore size × Stroke

Non-ion specification
Blank — Standard
NCU — Non-ion specification

Rod end accessory
Blank — No rod end accessory
I — I type knuckle
Y — Y type knuckle (with pin)
● For the cylinder joint and cylinder rod end, see p.1568.

Mounting type
2 — Side mount
4 — Front mount

Scraper (Made to order; available at ϕ 50 and ϕ 63 only)
Blank — No scraper
Y — With scraper

Block cylinder

Slim double acting cylinder

Number of sensor switches
1 — With 1 sensor switch
2 — With 2 sensor switches
3 — With 3 sensor switches
⋮ ⋮

Lead wire length (Applies to all except **CS□F**)
A — 1000mm [39in.]
B — 3000mm [118in.]

Sensor switch (for cylinders with sensor switches)

Blank	No sensor switch		
ZG530	2-lead wire Solid state type	with indicator lamp	DC10～28V
ZG553	3-lead wire Solid state type	with indicator lamp	DC4.5～28V
CS3M	Reed switch type	with indicator lamp	DC10～30V AC85～230V
CS4M	Reed switch type	with indicator lamp	DC10～30V AC85～115V
CS5M	Reed switch type	without indicator lamp	DC3～30V AC85～115V
CS2F	Reed switch type	with indicator lamp	AC85～230V
CS3F	Reed switch type	with indicator lamp	DC10～30V
CS4F	Reed switch type	with indicator lamp	DC10～30V
CS5F	Reed switch type	without indicator lamp	DC3～30V

● For details of sensor switches, see p.1544.
● **CS□F** comes with DIN connector. (It is not possible to install on ϕ 16.) All others are grommet type.

Inner Construction and Major Parts (cannot be disassembled)

● ϕ 16～ϕ 40

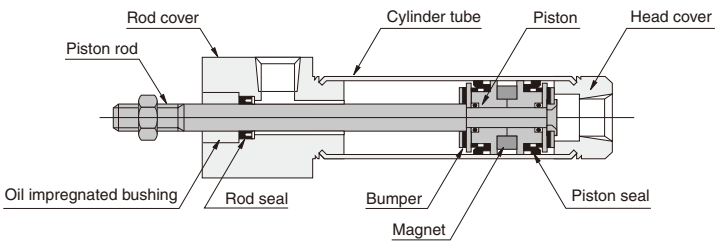

● ϕ 50, ϕ 63

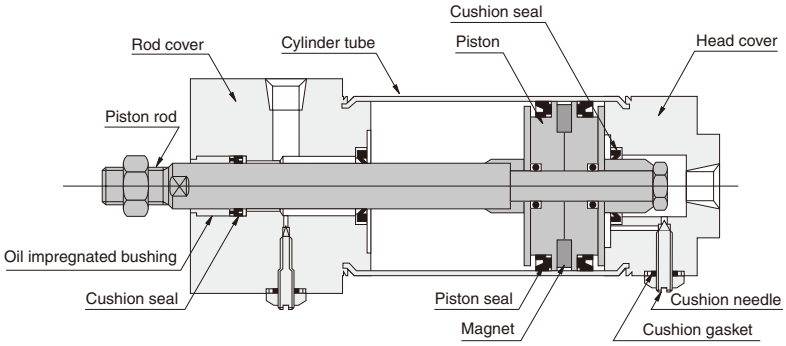

●With scraper

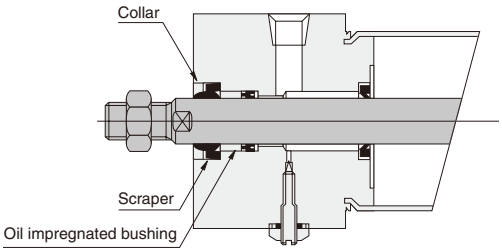

Major Parts and Materials

Parts \ Bore size	16	20～40	50, 63
Cylinder tube	Stainless steel		
Piston	Plastic		
Piston rod	Stainless steel (hard chrome plated)	Steel (hard chrome plated)	
Rod cover	Aluminum (anodized)		
Head cover			
Seal	Synthetic rubber (NBR)		
Bumper	Synthetic rubber (NBR)		—
Scraper	—		Synthetic rubber (NBR)
Collar	—		Aluminum (anodized)
Magnet	Plastic magnet		
I type knuckle Y type knuckle	Mild steel (nickel plated)	Mild steel (zinc plated)	

Seals

Note: Seals cannot be replaced.

Parts	Rod seal	Piston seal	Cushion seal	Cushion gasket	Scraper
Bore mm \ Quantity	1	2	2	2	1
16	NY-3-6	PPY-16	—	—	—
20	NY-12×8×3.5	PPY-20	—	—	—
25	NY-14×10×3.5	PPY-25	—	—	—
32	NY-17×12×4	PPY-32	—	—	—
40	NY-22×16×5	PPY-40	—	—	—
50	NY-22×16×5	PGY-50	PCS-20	DT-1-5	SCB-16
63	NY-22×16×5	PGY-63	PCS-20	DT-1-5	SCB-16

Mass

kg [lb.]

Bore size mm [in.]	Zero stroke mass		Additional mass for each 1mm [0.0394in.] stroke	Mass of knuckle	
	Side mount	Front mount		Y type knuckle	I type knuckle
16 [0.630]	0.09 [0.20]	0.08 [0.18]	0.0005 [0.0011]	0.017 [0.037]	0.020 [0.044]
20 [0.787]	0.15 [0.33]	0.14 [0.31]	0.0008 [0.0018]	0.041 [0.090]	0.036 [0.079]
25 [0.984]	0.22 [0.49]	0.19 [0.42]	0.0011 [0.0024]	0.075 [0.165]	0.070 [0.154]
32 [1.260]	0.37 [0.82]	0.30 [0.66]	0.0015 [0.0033]	0.075 [0.165]	0.070 [0.154]
40 [1.575]	0.66 [1.46]	0.49 [1.08]	0.0024 [0.0053]	0.120 [0.265]	0.132 [0.291]
50 [1.969]	1.15 [2.54]	0.90 [1.98]	0.0028 [0.0062]	0.120 [0.265]	0.132 [0.291]
63 [2.480]	1.62 [3.57]	1.26 [2.78]	0.0033 [0.0073]	0.120 [0.265]	0.132 [0.291]

Calculation example: For the mass of side mount type of 32mm bore size and 100mm stroke
0.037＋(0.0015×100)＝0.52kg [1.15lb.]

Dimensions of Block Cylinder Side Mounting Type (mm)

● ϕ 16

DAB 16 × Stroke -2

DAB-16-2

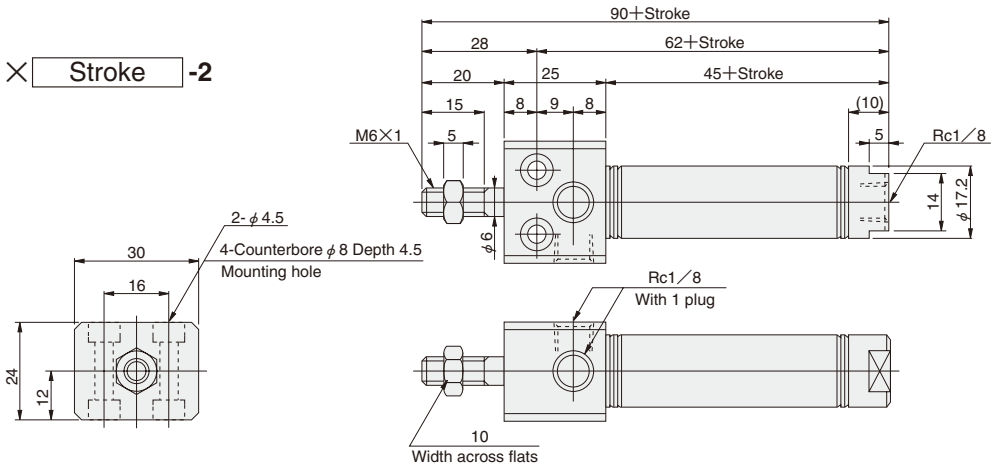

● ϕ 20～ϕ 40

DAB Bore size × Stroke -2

DAB- Bore size -2

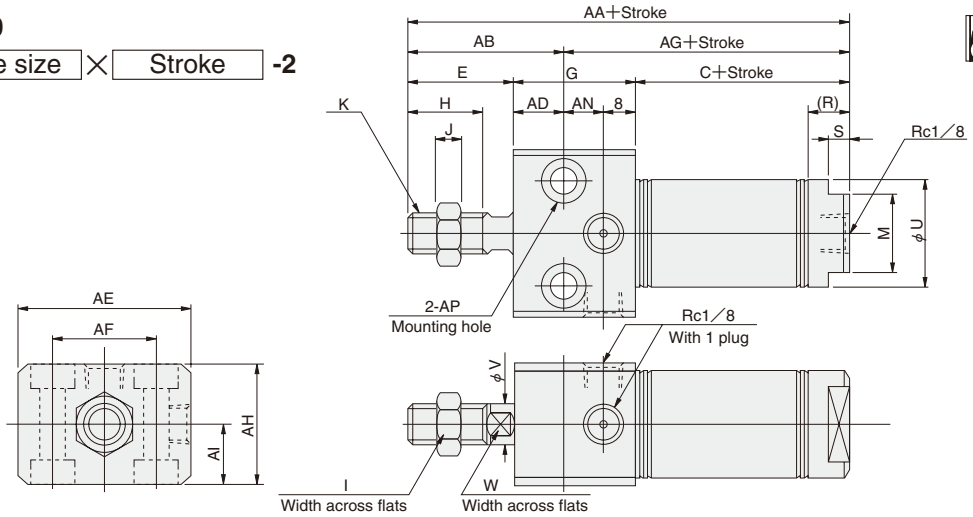

Bore mm [in.] \ Code	C	E	G	H	I	J	K	M	R	S	U	V	W	AA	AB	AD	AE	AF	AG	AH	AI	AN	AP
20 [0.787]	53	23	28	15	12	5	M8×1	17	10	5	21.4	8	6	104	34	11	38	22	70	28	14	9	φ6.6 2-Counterbore φ11 Depth6.5
25 [0.984]	53	26	30	18	14	6	M10×1.25	19	10	5	26.4	10	8	109	38	12	42	26	71	30	15	10	φ6.6 2-Counterbore φ11 Depth6.5
32 [1.260]	54	31	36	23	14	6	M10×1.25	22	11	6	33.6	12	10	121	45	14	54	34	76	36	18	14	φ9 2-Counterbore φ14 Depth8.6
40 [1.575]	60	31	44	23	19	8	M14×1.5	22	13	6	41.6	16	14	135	48	17	68	46	87	44	22	19	φ11 2-Counterbore φ17.5 Depth10.8

● ϕ 50, ϕ 63

DAB Bore size × Stroke -2

DAB- Bore size -2

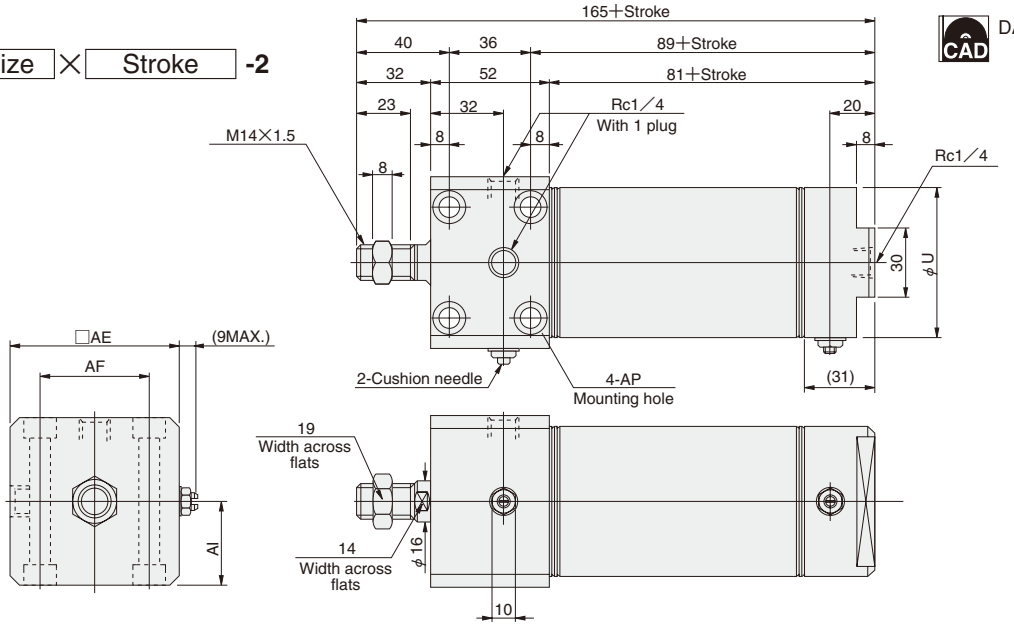

Bore mm [in.] \ Code	U	AE	AF	AI	AP
50 [1.969]	52	62	44	31	φ6.6 2-Counterbore φ11 Depth6.5
63 [2.480]	65.4	74	48	37	φ9 2-Counterbore φ14 Depth8.6

Dimensions of Block Cylinder Front Mounting Type (mm)

● ϕ 16

DAB 16 × Stroke -4

DAB-16-4

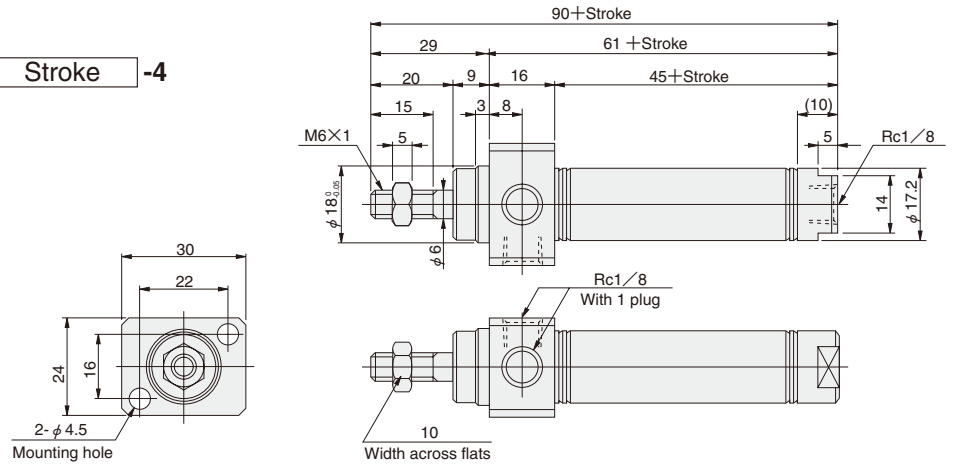

● ϕ 20～ϕ 40

DAB Bore size × Stroke -4

DAB- Bore size -4

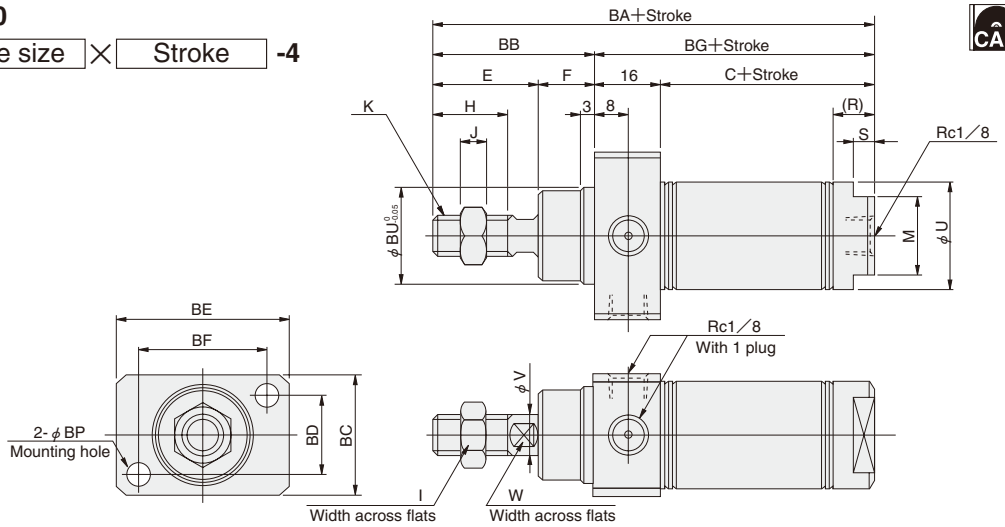

Bore mm [in.] \ Code	C	E	F	H	I	J	K	M	R	S	U	V	W	BA	BB	BC	BD	BE	BF	BG	BP	BU
20 [0.787]	53	23	12	15	12	5	M8×1	17	10	5	21.4	8	6	104	35	28	18	38	28	69	5.5	22
25 [0.984]	53	26	14	18	14	6	M10×1.25	19	10	5	26.4	10	8	109	40	30	20	42	32	69	5.5	24
32 [1.260]	54	31	14	23	14	6	M10×1.25	22	11	6	33.6	12	10	115	45	36	24	54	42	70	6.6	28
40 [1.575]	60	31	14	23	19	8	M14×1.5	22	13	6	41.6	16	14	121	45	44	28	68	52	76	9	34

● ϕ 50, ϕ 63

DAB Bore size × Stroke -4

DAB- Bore size -4

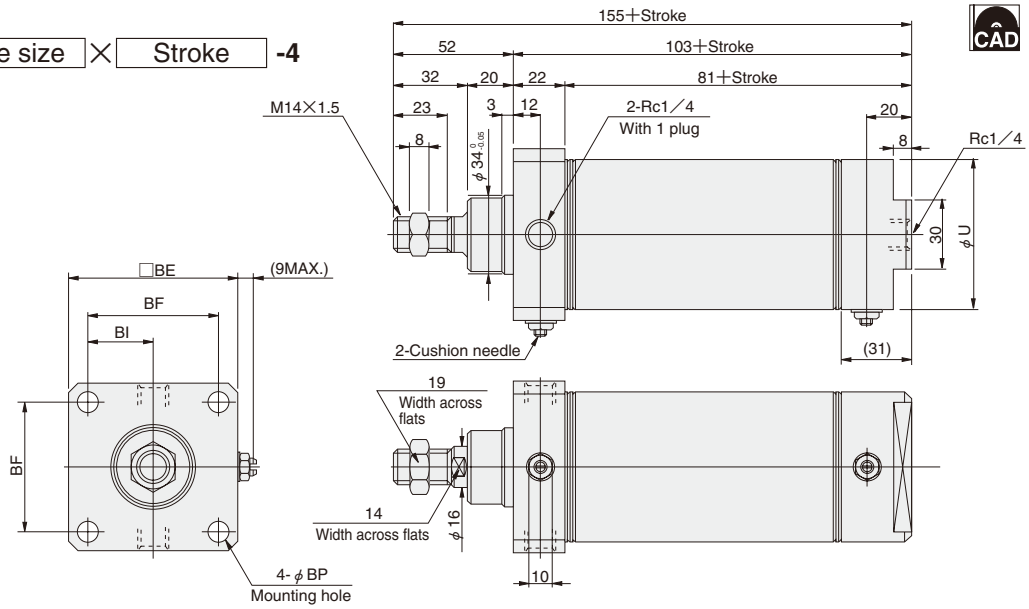

Bore mm [in.] \ Code	U	BE	BF	BI	BP
50 [1.969]	52	62	48	24	6.6
63 [2.480]	65.4	74	58	29	9

SLIM BLOCK SQUARE ROD CYLINDERS

Symbol

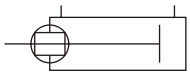

Specifications

Item / Bore size mm [in.]	20, 25 [0.787, 0.984]	32, 40 [1.260, 1.575]	50, 63 [1.969, 2.480]
Operation type	Double acting type		
Media	Air		
Mounting type	Side mount, Front mount		
Operating pressure range MPa [psi.]	0.1～0.9 [15～131]		0.05～0.7 [7～102]
Proof pressure MPa [psi.]	1.32 [191]		1.03 [149]
Operating temperature range °C [°F]	0～70 [32～158]		
Operating speed range mm/s [in./sec.]	50～700 [2.0～27.6]		50～500 [2.0～19.7]
Cushion	Fixed type (Rubber bumper)		Variable type (Stroke15mm [0.59in.])
Lubrication	Not required		
Non-rotating accuracy	±1.5°	±1°	
Port size Rc	1/8		1/4

Bore Size and Stroke

mm

Bore size	Standard strokes	Maximum stroke	Maximum available stroke
20	25 50 75 100 125 150	150	500
25			
32			
40			
50	25 50 75 100 150		
63			

Remarks: 1. Stroke tolerance $^{+1}_{0}$ [$^{+0.039in.}_{0}$]
2. For non-standard strokes, consult us.

Order Codes

DA **BL** **50×100** – □ – □ – □ □ □

Bore size × Stroke

Block square rod cylinder

Slim double acting cylinder

Mounting type
2 ——— Side mount
4 ——— Front mount

Rod end accessory
Blank — No rod end accessory
I ——— I type knuckle
Y ——— Y type knuckle (with pin)
● For the cylinder joint and cylinder rod end, see p.1568.

Number of sensor switches
1 ——— With 1 sensor switch
2 ——— With 2 sensor switches
3 ——— With 3 sensor switches
⋮ ⋮

Lead wire length
(Applies to all except **CS□F**)
A ——— 1000mm [39in.]
B ——— 3000mm [118in.]

Sensor switch (for cylinders with sensor switches)

Blank	No sensor switch		
ZG530	2-lead wire Solid state type	with indicator lamp	DC10～28V
ZG553	3-lead wire Solid state type	with indicator lamp	DC4.5～28V
CS3M	Reed switch type	with indicator lamp	DC10～30V AC85～230V
CS4M	Reed switch type	with indicator lamp	DC10～30V AC85～115V
CS5M	Reed switch type	without indicator lamp	DC3～30V AC85～115V
CS2F	Reed switch type	with indicator lamp	AC85～230V
CS3F	Reed switch type	with indicator lamp	DC10～30V
CS4F	Reed switch type	with indicator lamp	DC10～30V
CS5F	Reed switch type	without indicator lamp	DC3～30V

● For details of sensor switches, see p.1544.
● **CS□F** comes with DIN connector.
All others are grommet type.

Inner Construction and Major Parts (cannot be disassembled)

● ϕ 20～ϕ 40

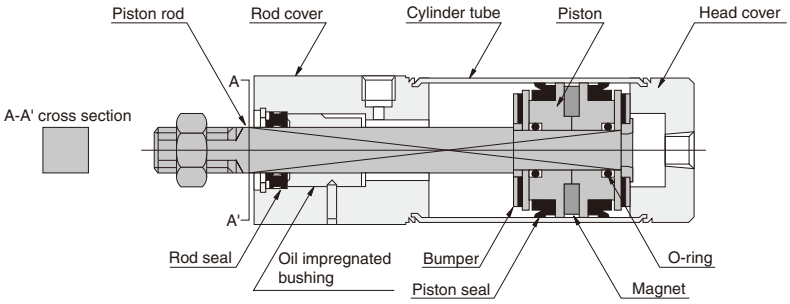

● ϕ 50, ϕ 63

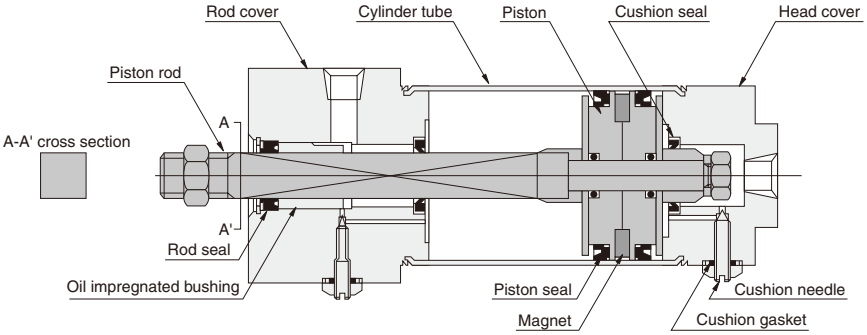

Major parts and Materials

Parts \ Bore size	20～40	50, 63
Cylinder tube	Stainless steel	
Piston	Plastic	
Piston rod	Steel (hard chrome plated)	
Rod cover Head cover	Aluminum (anodized)	
Seal	Synthetic rubber (NBR)	
Bumper	Synthetic rubber (NBR)	—
Magnet	Plastic magnet	
I type knuckle Y type knuckle	Mild steel (zinc plated)	

Mass

kg [lb.]

Bore size mm [in.]	Zero stroke mass		Additional mass for each 1mm [0.0394in.] stroke
	Side mount	Front mount	
20 [0.787]	0.15 [0.33]	0.14 [0.31]	0.0008 [0.0018]
25 [0.984]	0.21 [0.46]	0.18 [0.40]	0.0009 [0.0020]
32 [1.260]	0.40 [0.88]	0.33 [0.73]	0.0014 [0.0031]
40 [1.575]	0.66 [1.46]	0.49 [1.08]	0.0021 [0.0046]
50 [1.969]	1.15 [2.54]	0.90 [1.98]	0.0027 [0.0060]
63 [2.480]	1.62 [3.57]	1.26 [2.78]	0.0032 [0.0071]

Calculation example: For the mass of side mount type of 40mm bore size and 100mm stroke
0.066＋(0.0021×100)＝0.87kg [1.92lb.]

Seals

Note: Seals cannot be replaced.

Parts	Rod seal	Piston seal	Cushion seal	Cushion gasket
Bore mm \ Quantity	1	2	2	2
20	KC-7.4	PPY-20	—	—
25	KC-7.4	PPY-25	—	—
32	KC-10	PPY-32	—	—
40	KC-13	PPY-40	—	—
50	KC-13	PGY-50	PCS-20	DT-1-5
63	KC-13	PGY-63	PCS-20	DT-1-5

Dimensions of Block Square Rod, Side Mounting Type (mm)

● ϕ 20～ϕ 40

DABL Bore size × Stroke **-2**

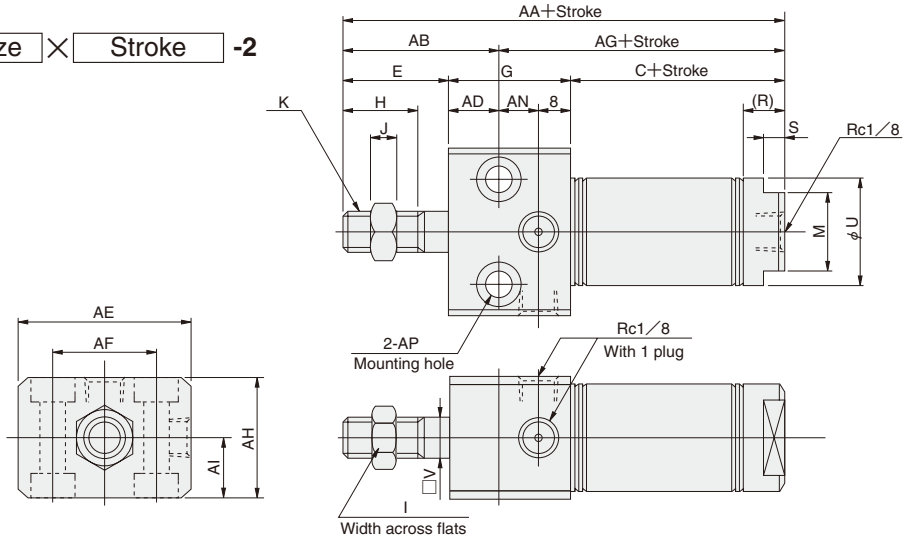

Bore mm [in.] \ Code	C	E	G	H	I	J	K	M	R	S	U	□V	AA	AB	AD	AE	AF	AG	AH	AI	AN	AP
20 [0.787]	53	23	28	15	12	5	M8×1	17	10	5	21.4	7.4	104	34	11	38	22	70	28	14	9	ϕ6.6 2-Counterbore ϕ11 Depth6.5
25 [0.984]	53	26	30	18	14	6	M8×1	19	10	5	26.4	7.4	109	38	12	42	26	71	30	15	10	ϕ6.6 2-Counterbore ϕ11 Depth6.5
32 [1.260]	54	31	36	23	14	6	M10×1.25	22	11	6	33.6	10	121	45	14	54	34	76	36	18	14	ϕ9 2-Counterbore ϕ14 Depth8.6
40 [1.575]	60	31	44	23	19	8	M14×1.5	22	13	6	41.6	13	135	48	17	68	46	87	44	22	19	ϕ11 2-Counterbore ϕ17.5 Depth10.8

● ϕ 50, ϕ 63

DABL Bore size × Stroke **-2**

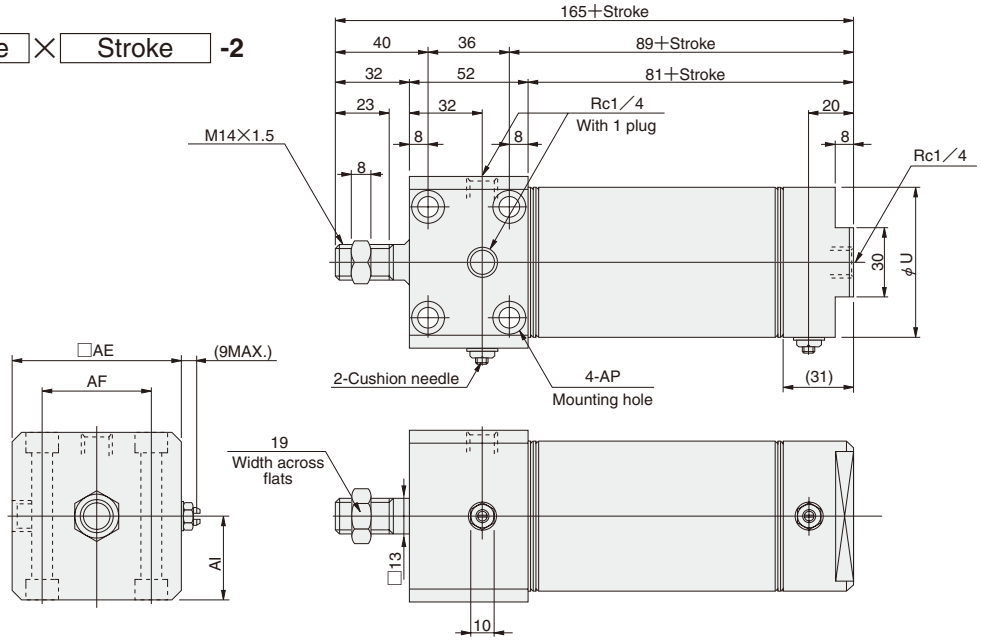

Bore mm [in.] \ Code	U	AE	AF	AI	AP
50 [1.969]	52	62	44	31	ϕ6.6 2-Counterbore ϕ11 Depth6.5
63 [2.480]	65.4	74	48	37	ϕ9 2-Counterbore ϕ14 Depth8.6

Dimensions of Block Square Rod, Front Mounting Type (mm)

● ϕ 20～ϕ 40

DABL Bore size × Stroke **-4**

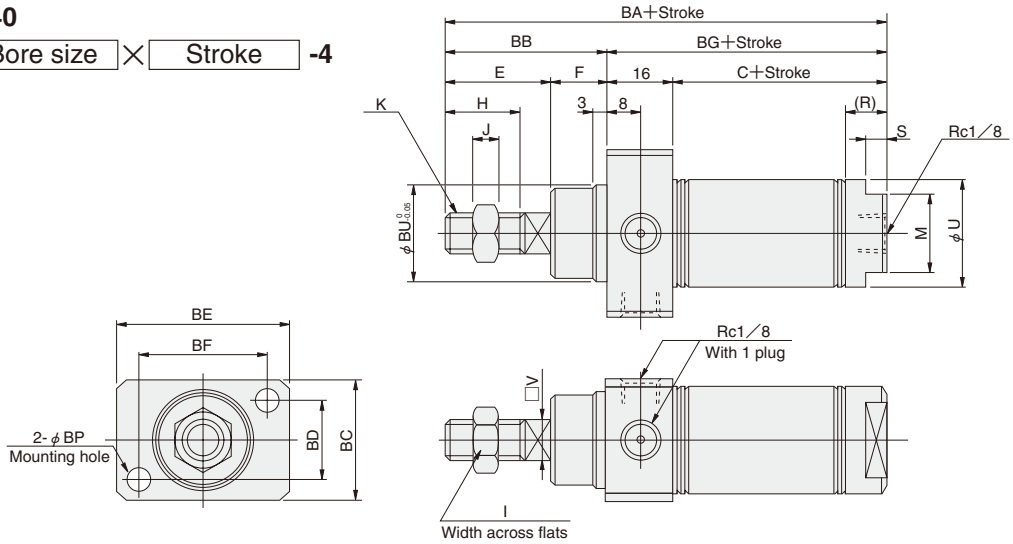

Bore mm [in.] \ Code	C	E	F	H	I	J	K	M	R	S	U	□V	BA	BB	BC	BD	BE	BF	BG	BP	BU
20 [0.787]	53	23	12	15	12	5	M8×1	17	10	5	21.4	7.4	104	35	28	18	38	28	69	5.5	22
25 [0.984]	54	26	14	18	14	6	M8×1	19	10	5	26.4	7.4	109	40	30	20	42	32	69	5.5	24
32 [1.260]	54	31	14	23	14	6	M10×1.25	22	11	6	33.6	10	115	45	36	24	54	42	70	6.6	28
40 [1.575]	60	31	14	23	19	8	M14×1.5	22	13	6	41.6	13	121	45	44	28	68	52	76	9	34

● ϕ 50, ϕ 63

DABL Bore size × Stroke **-4**

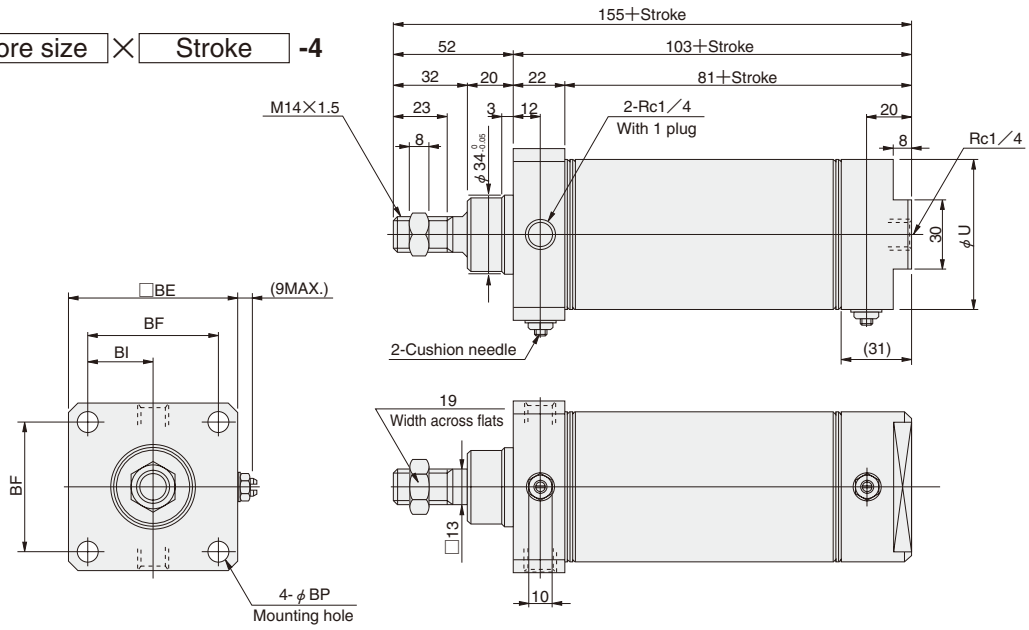

Bore mm [in.] \ Code	U	BE	BF	BI	BP
50 [1.969]	52	62	48	24	6.6
63 [2.480]	65.4	74	58	29	9

SLIM BLOCK CYLINDERS WITH VARIABLE CUSHION

Symbol

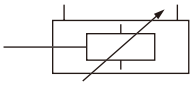

Specifications

Item / Bore size mm [in.]	16 [0.630]	20, 25 [0.787, 0.984]	32, 40 [1.260, 1.575]
Operation type	Double acting type		
Media	Air		
Mounting type	Side mount, Front mount		
Operating pressure range MPa [psi.]	0.15～0.9 [22～131]		0.1～0.9 [15～131]
Proof pressure MPa [psi.]	1.32 [191]		
Operating temperature range °C [°F]	0～70 [32～158]		
Operating speed range mm/s [in./sec.]	30～1000 [1.2～39.4]		
Cushion stroke mm [in.]	9 [0.35]	12 [0.47]	
Lubrication	Not required		
Port size Rc	1/8		

Bore Size and Stroke

mm

Bore size	Standard strokes	Maximum available stroke
16	25 50 75 100	200
20	25 50 75 100 125 150	500
25	25 50 75 100 125 150 200	
32		
40	25 50 75 100 125 150 200 250 300	

Remarks: 1. Stroke tolerance $^{+1}_{0}$ [$^{+0.039in.}_{0}$]
2. For non-standard strokes, consult us.

Order Codes

DA **BC** **20×100** – □ – □ – □□□

DA — **Slim double acting cylinder**

BC — **Block cylinder with variable cushion**

20×100 — **Bore size × Stroke**

□ — **Mounting type**
2 ——— Side mount
4 ——— Front mount

□ — **Rod end accessory**
Blank — No rod end accessory
I ——— I type knuckle
Y ——— Y type knuckle (with pin)
● For the cylinder joint and cylinder rod end, see p.1568.

□ — **Sensor switch** (for cylinders with sensor switches)

Blank	No sensor switch		
ZG530	2-lead wire Solid state type	with indicator lamp	DC10～28V
ZG553	3-lead wire Solid state type	with indicator lamp	DC4.5～28V
CS3M	Reed switch type	with indicator lamp	DC10～30V AC85～230V
CS4M	Reed switch type	with indicator lamp	DC10～30V AC85～115V
CS5M	Reed switch type	without indicator lamp	DC3～30V AC85～115V
CS2F	Reed switch type	with indicator lamp	AC85～230V
CS3F	Reed switch type	with indicator lamp	DC10～30V
CS4F	Reed switch type	with indicator lamp	DC10～30V
CS5F	Reed switch type	without indicator lamp	DC3～30V

● For details of sensor switches, see p.1544.
● **CS□F** comes with DIN connector. (It is not possible to install on ϕ 16.) All others are grommet type.

□ — **Lead wire length**
(Applies to all except **CS□F**)
A ——— 1000mm [39in.]
B ——— 3000mm [118in.]

□ — **Number of sensor switches**
1 ——— With 1 sensor switch
2 ——— With 2 sensor switches
3 ——— With 3 sensor switches
⋮ ⋮

Dimensions of Block Cylinder with Variable Cushion, Side Mounting Type (mm)

● ϕ 16～ϕ 40 **DABC** Bore size × Stroke **-2**

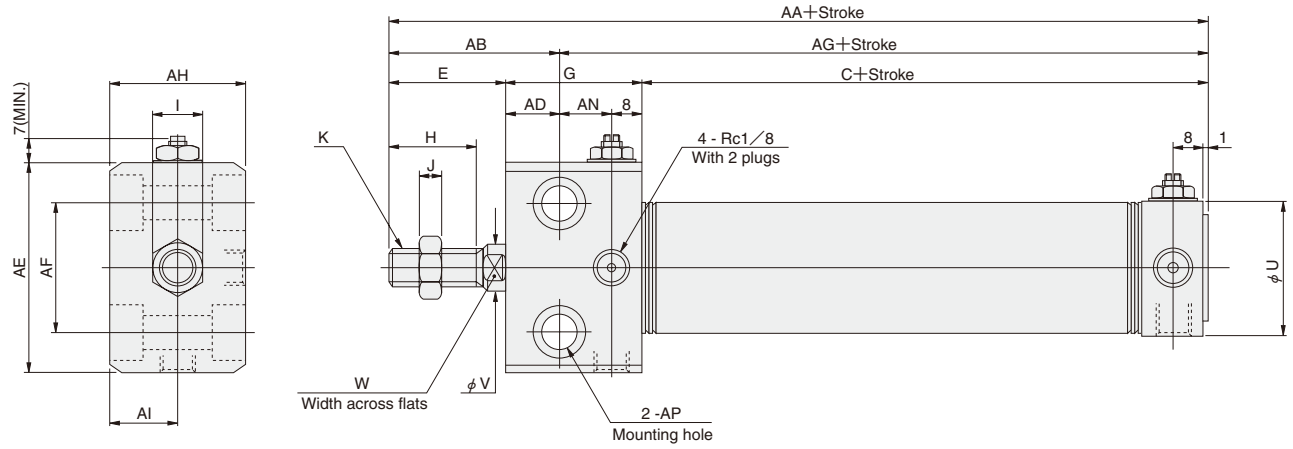

Bore mm [in.] \ Code	C	E	G	H	I	J	K	U	V	W	AA	AB	AD	AE	AF	AG	AH	AI	AP	AN
16 [0.630]	53	20	25	15	10	5	M6×1	22	6	—	98	28	8	30	16	70	24	12	φ4.5 Counterbore φ8 Depth4.5	9
20 [0.787]	61	23	28	15	12	5	M8×1	27	8	6	112	34	11	38	22	78	28	14	φ6.6 Counterbore φ11 Depth6.5	9
25 [0.984]	61	26	30	18	14	6	M10×1.25	29	10	8	117	38	12	42	26	79	30	15	φ6.6 Counterbore φ11 Depth6.5	10
32 [1.260]	61	31	36	23	14	6	M10×1.25	35	12	10	128	45	14	54	34	83	36	18	φ9 Counterbore φ14 Depth8.6	14
40 [1.575]	63	31	44	23	19	8	M14×1.5	41.6	16	14	138	48	17	68	46	90	44	22	φ11 Counterbore φ17.5 Depth10.8	19

Dimensions of Block Cylinder with Variable Cushion, Front Mounting Type (mm)

● ϕ 16～ϕ 40 **DABC** Bore size × Stroke **-4**

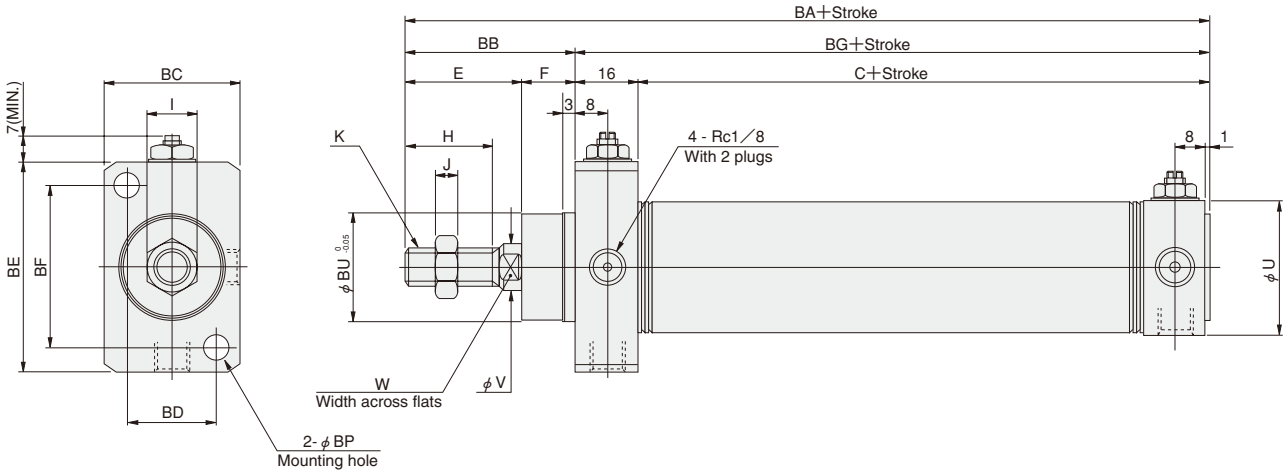

Bore mm [in.] \ Code	C	E	F	H	I	J	K	U	V	W	BA	BB	BC	BD	BE	BF	BG	BP	BU
16 [0.630]	53	20	9	15	10	5	M6×1	22	6	—	98	29	24	16	30	22	69	4.5	18
20 [0.787]	61	23	12	15	12	5	M8×1	27	8	6	112	35	28	18	38	28	77	5.5	22
25 [0.984]	61	26	14	18	14	6	M10×1.25	29	10	8	117	40	30	20	42	32	77	5.5	24
32 [1.260]	61	31	14	23	14	6	M10×1.25	35	12	10	122	45	36	24	54	42	77	6.6	28
40 [1.575]	63	31	14	23	19	8	M14×1.5	41.6	16	14	124	45	44	28	68	52	79	9	34

SLIM BLOCK END KEEP CYLINDERS

Head Side End Keep, Rod Side End Keep

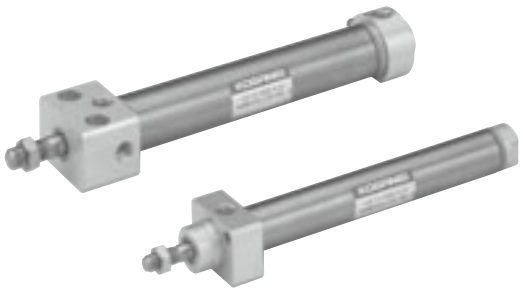

Symbols

●Head side end keep

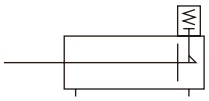

●Rod side end keep

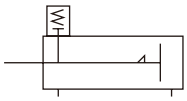

Specifications

Item / Bore size mm [in.]	16 [0.630]	20 [0.787]	25 [0.984]	32 [1.260]	40 [1.575]	50 [1.969]	63 [2.480]
Operation type	Double acting type, with head side or rod side stroke end keep mechanism						
Media	Air						
Mounting type	Side mount, Front mount						
Operating pressure range MPa [psi.]	0.15～0.9 [22～131]	0.1～0.9 [15～131]				0.1～0.7 [15～102]	
Proof pressure MPa [psi.]	1.32 [191]					1.03 [149]	
Operating temperature range °C [°F]	0～70 [32～158]						
Operating speed range mm/s [in./sec.]	50～700 [2.0～27.6]					50～500 [2.0～19.7]	
Cushion	Fixed type (Rubber bumper)					Variable type (Stroke15mm [0.59in.])	
Lubrication	Not required						
Maximum holding force (at end keep) N [lbf.]	124.5 [27.99]	194.2 [43.66]	303 [68.11]	496.2 [111.5]	775.7 [174.4]	943.4 [212.1]	1497 [336.5]
Backlash (at end keep) mm [in.]	1.4 [0.055] MAX.		1.6 [0.063] MAX.				
Port size Rc	1/8					1/4	

Bore Size and Stroke

mm

Bore size	Standard strokes	Maximum stroke	Maximum available stroke
16	15 25 50 75 100	100	300
20	25 50 75 100 125 150	150	500
25	25 50 75 100 125 150 200	200	
32	25 50 75 100 125 150 200	200	
40	25 50 75 100 125 150 200 250 300	300	
50	25 50 75 100 150 200 250 300	300	
63	25 50 75 100 150 200 250 300	300	

Remarks: 1. Stroke tolerance $^{+1}_{0}$ [$^{+0.039in.}_{0}$]
2. For non-standard strokes, consult us.

Order Codes

DABK □ **20×50** – □ – □ – □ – □ – □ □ □

Bore size × Stroke

Non-ion specification
Blank — Standard
NCU — Non-ion specification

End keep position
HL —— Head side end keep
RL —— Rod side end keep

Scraper
(Available at ϕ50 and ϕ63 only, made to order)
Blank — No scraper
Y —— With scraper

Slim block end keep cylinder

Mounting type
2 —— Side mount
4 —— Front mount

Rod end accessory
Blank — No rod end accessory
I —— I type knuckle
Y —— Y type knuckle (with pin)
● For the cylinder joint and cylinder rod end, see p.1568.

Number of sensor switches
1 —— With 1 sensor switch
2 —— With 2 sensor switches
3 —— With 3 sensor switches
⋮ ⋮

Lead wire length
(Applies to all except **CS□F**)
A —— 1000mm [39in.]
B —— 3000mm [118in.]

Sensor switch (for cylinders with sensor switches)

Blank	No sensor switch		
ZG530	2-lead wire Solid state type	with indicator lamp	DC10～28V
ZG553	3-lead wire Solid state type	with indicator lamp	DC4.5～28V
CS3M	Reed switch type	with indicator lamp	DC10～30V AC85～230V
CS4M	Reed switch type	with indicator lamp	DC10～30V AC85～115V
CS5M	Reed switch type	without indicator lamp	DC3～30V AC85～115V
CS2F	Reed switch type	with indicator lamp	AC85～230V
CS3F	Reed switch type	with indicator lamp	DC10～30V
CS4F	Reed switch type	with indicator lamp	DC10～30V
CS5F	Reed switch type	without indicator lamp	DC3～30V

● For details of sensor switches, see p.1544.
● **CS□F** comes with DIN connector. (It is not possible to install on ϕ16.) All others are grommet type.

Inner Construction and Major Parts (cannot be disassembled)

● ϕ 16

●Rod side end keep

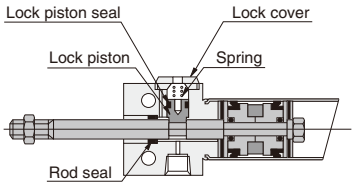

●Head side end keep

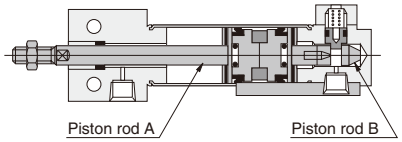

● ϕ 20, ϕ 25

●Rod side end keep

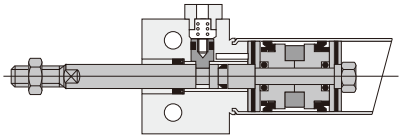

●Head side end keep

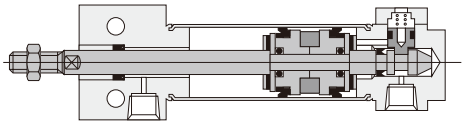

● ϕ 32, ϕ 40

A-A' cross section

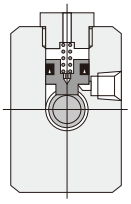

●Rod side end keep

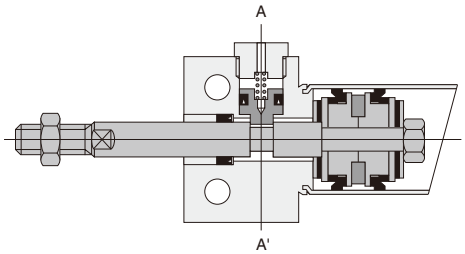

●Head side end keep

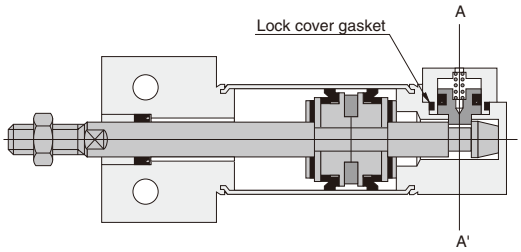

● ϕ 50, ϕ 63

A-A' cross section

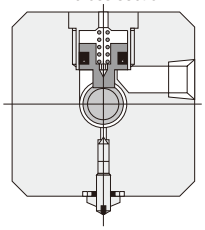

●Rod side end keep

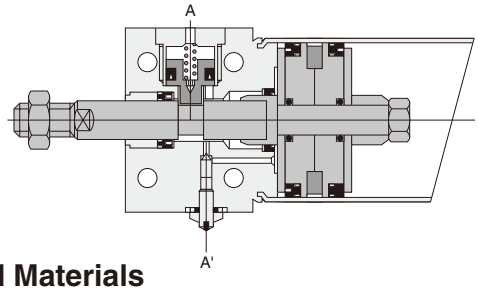

●Head side end keep

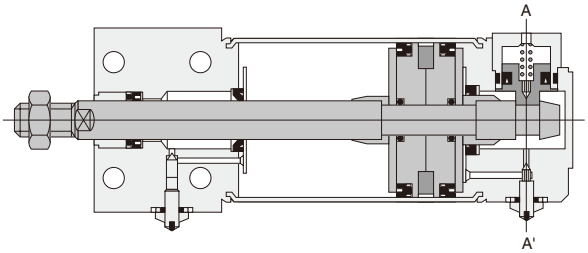

Major Parts and Materials

Parts \ Bore size	16	20, 25	32, 40, 50, 63
Piston rod A	Stainless steel (hard chrome plated)	Steel (hard chrome plated)	
Piston rod B	Stainless steel	Steel (zinc plated)	
Spring	Stainless steel		Piano wire
Lock piston	Stainless steel		
Lock cover	Stainless steel	Aluminum (anodized)	
Y type knuckle, I type knuckle	Mild steel (zinc plated)		

Other than the items listed above, it is the same as for the standard Slim Cylinder.

Seals

Note: Seals cannot be replaced.

Parts / Bore mm	Rod seal	Lock piston seal	Lock cover gasket
Quantity	1	1	1
16	—	MYN-5	O-ring (Special dimensions)
20	GYH-9	MYN-5	—
25	GYH-11	MYN-5	—
32	—	MYN-10A	S18
40	—	MYN-10A	S18
50	—	MYN-16	S22.4
63	—	MYN-16	S22.4

Other than the items listed above, it is the same as for the standard Slim Cylinder.

Mass

kg [lb.]

Bore size mm [in.]	Zero stroke mass				Additional mass for each 1mm [0.0394in.] stroke	Mass of knuckle	
	-HL : Head side end keep		-RL : Rod side end keep			Y type knuckle	I type knuckle
	Side mount	Front mount	Side mount	Front mount			
16 [0.630]	0.11 [0.24]	0.10 [0.22]	0.10 [0.22]	0.09 [0.20]	0.0005 [0.0011]	0.017 [0.037]	0.020 [0.044]
20 [0.787]	0.18 [0.40]	0.17 [0.37]	0.17 [0.37]	0.16 [0.35]	0.0008 [0.0018]	0.042 [0.093]	0.035 [0.077]
25 [0.984]	0.25 [0.55]	0.23 [0.51]	0.24 [0.53]	0.22 [0.49]	0.0011 [0.0024]	0.075 [0.165]	0.070 [0.154]
32 [1.260]	0.39 [0.86]	0.36 [0.79]	0.38 [0.84]	0.35 [0.77]	0.0015 [0.0033]		
40 [1.575]	0.70 [1.54]	0.67 [1.48]	0.68 [1.50]	0.65 [1.43]	0.0024 [0.0053]	0.122 [0.269]	0.132 [0.291]
50 [1.969]	1.22 [2.69]	1.17 [2.58]	1.20 [2.65]	1.14 [2.51]	0.0029 [0.0064]		
63 [2.480]	1.69 [3.73]	1.30 [2.87]	1.67 [3.68]	1.28 [2.82]	0.0035 [0.0077]		

Calculation example: For head side end keep side mount type of 32mm bore size and 100mm stroke, 0.39＋(0.0015×100)＝0.54kg [1.19lb.]

-HL Dimensions of Head Side End Keep, Side Mounting Type (mm)

● ϕ 16 **DABK16 × Stroke -HL-2**

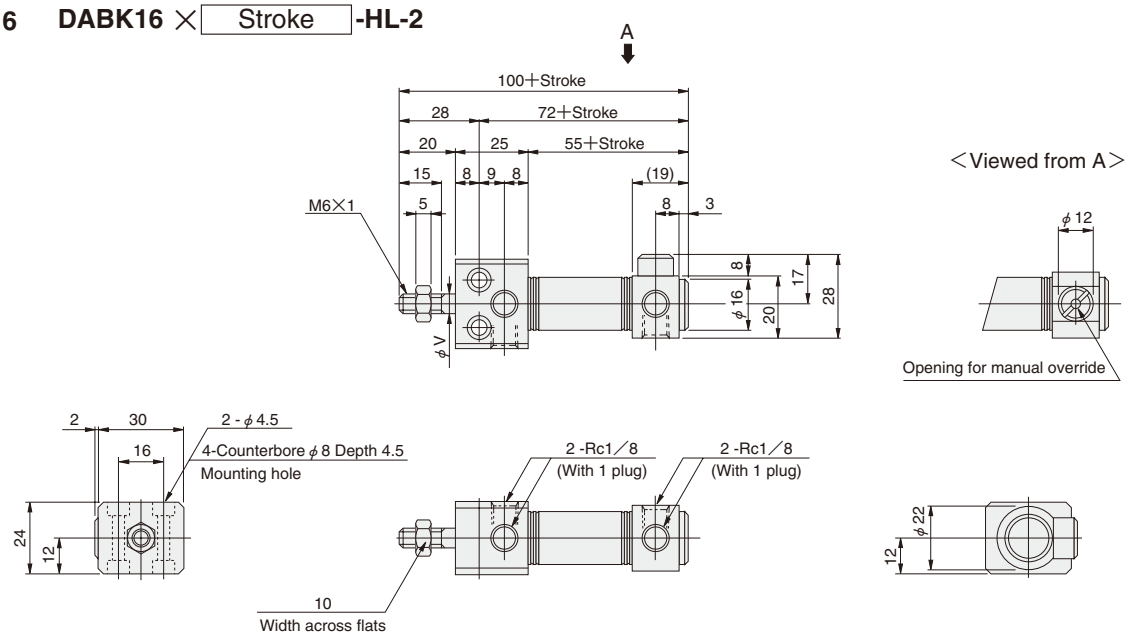

● ϕ 20～ϕ 40 **DABK Bore size × Stroke -HL-2**

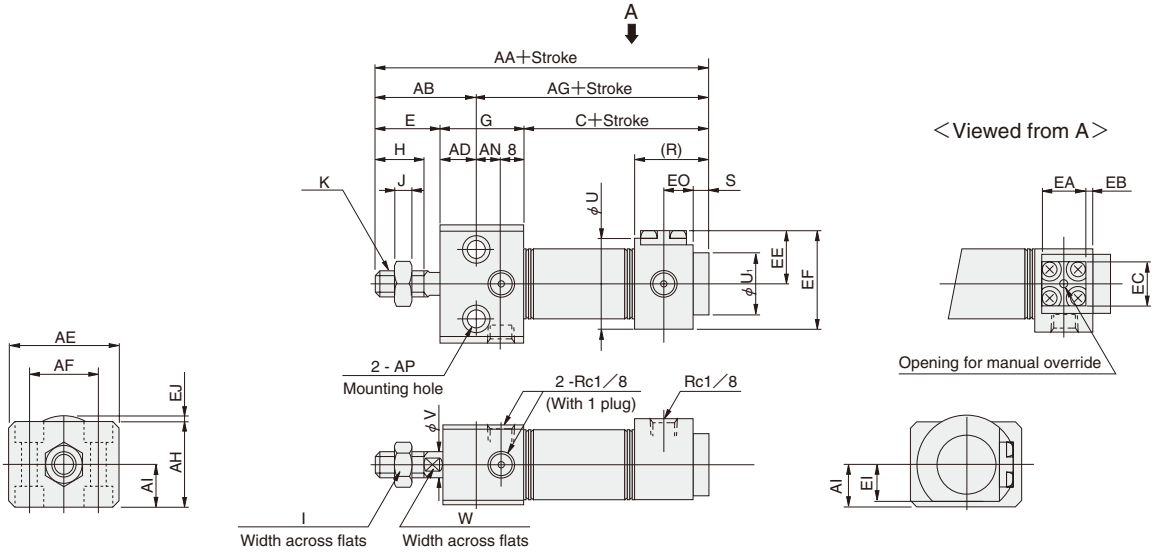

● The drawing is for the ϕ 20 and ϕ 25. (Contour dimensions of the ϕ 32 and ϕ 40 head covers are smaller than the block portion.)

Bore mm [in.] \ Code	C	E	G	H	I	J	K	R	S	U	U_1	V	W
20 [0.787]	66	23	28	15	12	5	M8×1	22	6		20	8	6
25 [0.984]	66	26	30	18	14	6	M10×1.25	22	6	29	22	10	8
32 [1.260]	73	31	36	23	14	6	M10×1.25	27	1		27	12	10
40 [1.575]	80	31	44	23	19	8	M14×1.5	32	1	35	33	16	14

Bore mm [in.] \ Code	AA	AB	AD	AE	AF	AG	AH	AI	AN	AP	EA	EB	EC	EE	EF	EI	EJ	EO
20 [0.787]	117	34	11	38	22	83	28	14	9	ϕ6.6 Counterbore ϕ11 Depth6.5	16	—	16	17.5	32	12.5	0.5	8
25 [0.984]	122	38	12	42	26	84	30	15	10	ϕ6.6 Counterbore ϕ11 Depth6.5	16	—	16	18.5	36	13.5	2.5	8
32 [1.260]	140	45	14	54	34	95	36	18	14	ϕ9 Counterbore ϕ14 Depth8.6	24	2	25	22.5	40.5	17.5	—	14
40 [1.575]	155	48	17	68	46	107	44	22	19	ϕ11 Counterbore ϕ17.5 Depth10.8	24	4	25	25.5	46	21	—	16

-HL Dimensions of Head Side End Keep, Side Mounting Type (mm)

● ϕ 50, ϕ 63 **DABK** Bore size × Stroke **-HL-2**

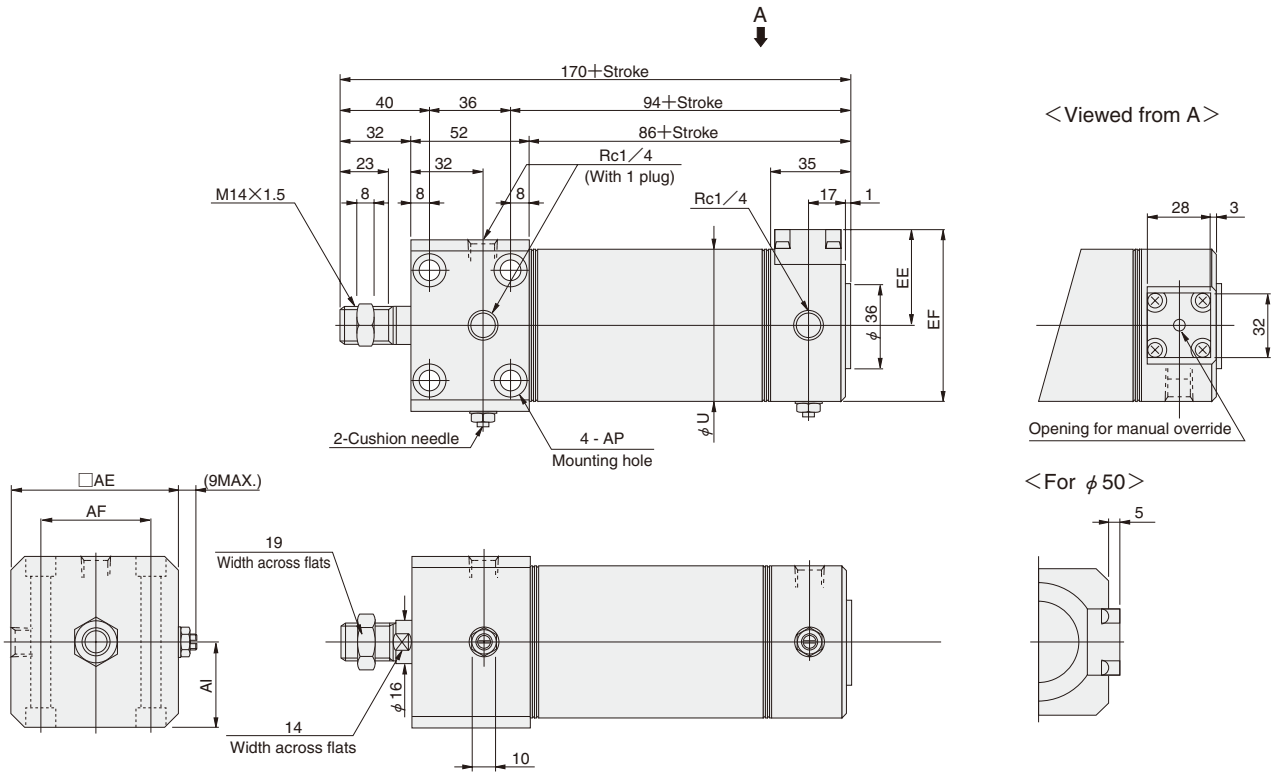

Bore mm [in.] \ Code	U	AE	AF	AI	AP	EE	EF
50 [1.969]	52	62	44	31	ϕ6.6 Counterbore ϕ11 Depth6.5	35.5	61.5
63 [2.480]	65.4	74	48	37	ϕ9 Counterbore ϕ14 Depth8.6	35.5	68.5

-HL Dimensions of Head Side End Keep, Front Mounting Type (mm)

● ϕ 16 **DABK 16 × [Stroke] -HL-4**

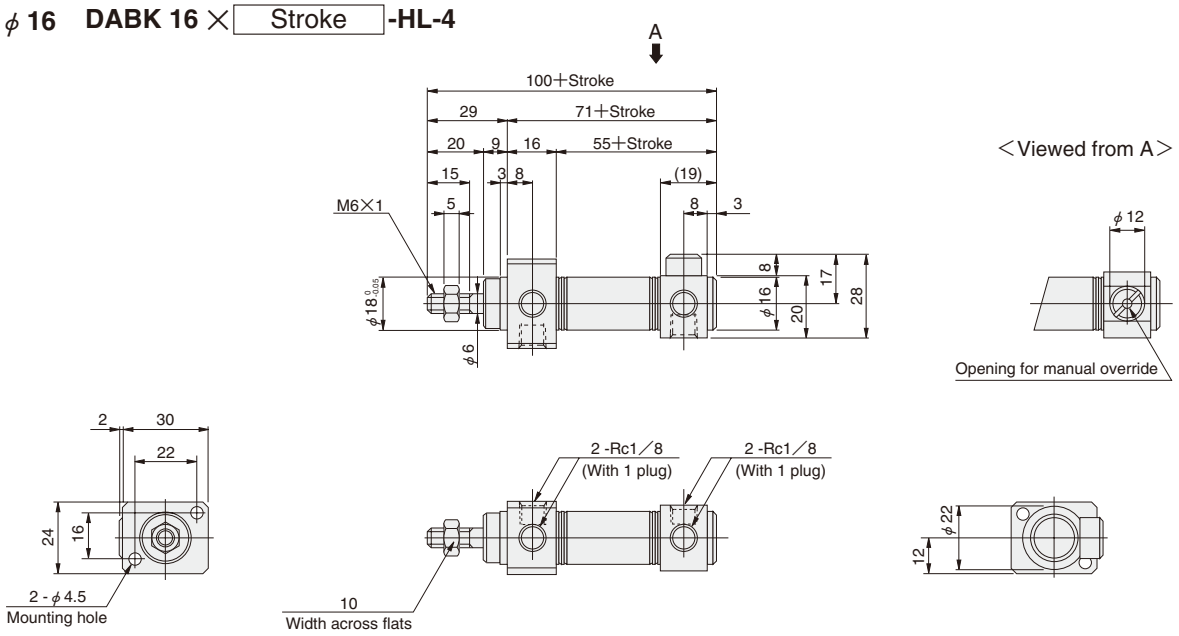

● ϕ 20～ϕ 40 **DABK [Bore size] × [Stroke] -HL-4**

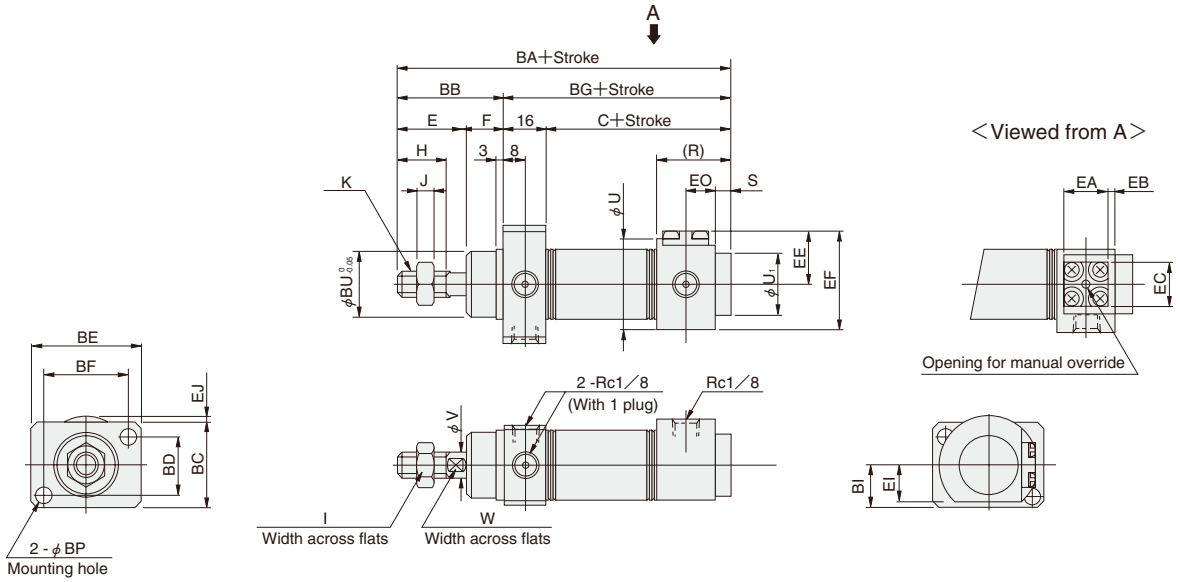

●The drawing is for the ϕ 20 and ϕ 25. (Contour dimensions of the ϕ 32 and ϕ 40 head covers are smaller than the block portion.)

Bore mm [in.] \ Code	C	E	F	H	I	J	K	R	S	U	U_1	V	W
20 [0.787]	66	23	12	15	12	5	M8×1	22	6		20	8	6
25 [0.984]	66	26	14	18	14	6	M10×1.25	22	6	29	22	10	8
32 [1.260]	73	31	14	23	14	6	M10×1.25	27	1		27	12	10
40 [1.575]	80	31	14	23	19	8	M14×1.5	32	1	35	33	16	14

Bore mm [in.] \ Code	BA	BB	BC	BD	BE	BF	BG	BI	BP	BU	EA	EB	EC	EE	EF	EI	EJ	EO
20 [0.787]	117	35	28	18	38	28	82	14	5.5	22	16	—	16	17.5	32	12.5	0.5	8
25 [0.984]	122	40	30	20	42	32	82	15	5.5	24	16	—	16	18.5	36	13.5	2.5	8
32 [1.260]	134	45	36	24	54	42	89	18	6.6	28	24	2	25	22.5	40.5	17.5	—	14
40 [1.575]	141	45	44	28	68	52	96	22	9	34	24	4	25	25.5	46	21	—	16

-HL Dimensions of Head Side End Keep, Front Mounting Type (mm)

● ϕ 50, ϕ 63 **DABK** Bore size × Stroke **-HL-4**

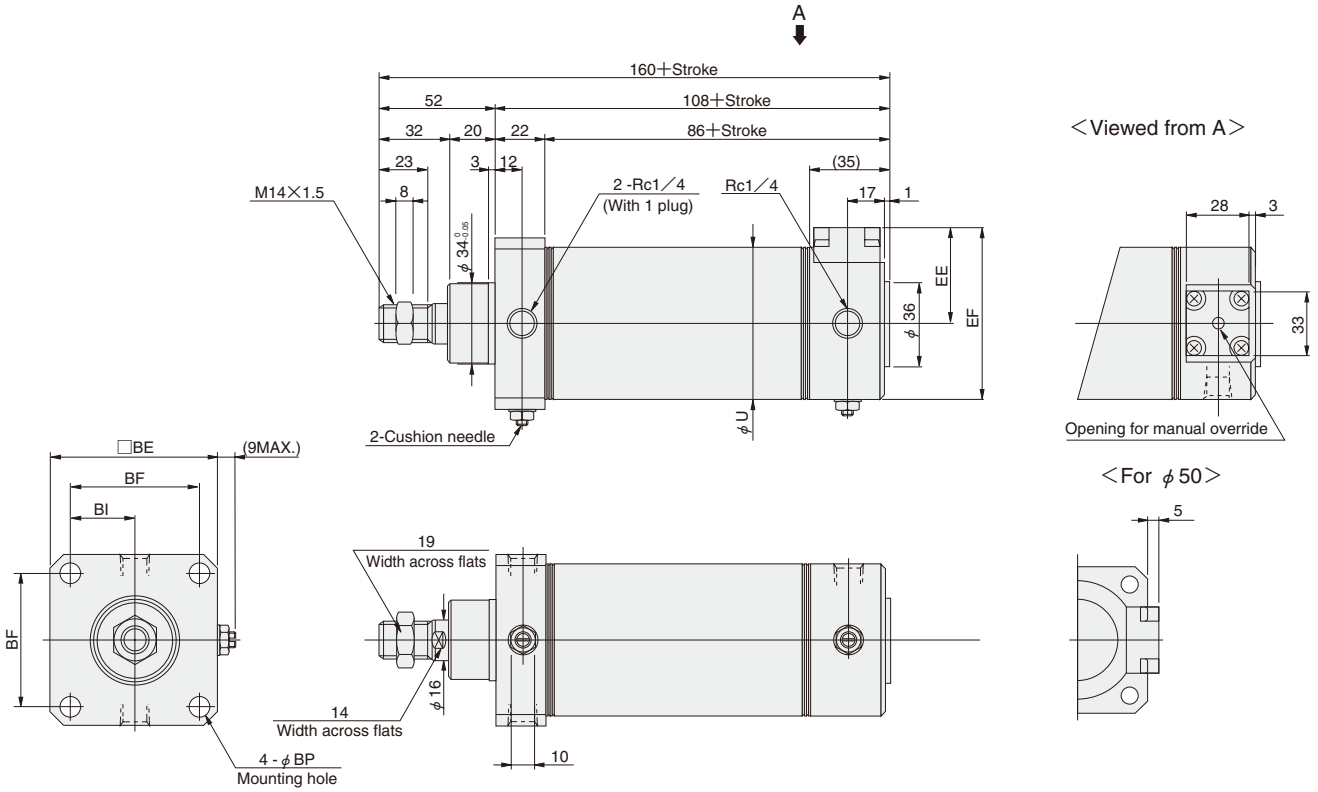

Bore mm [in.] \ Code	U	BE	BF	BI	BP	EE	EF
50 [1.969]	52	62	48	24	6.6	35.5	61.5
63 [2.480]	65.4	74	58	29	9	35.5	68.5

-RL Dimensions of Rod Side End Keep, Side Mounting Type (mm)

● φ 16 DABK16 × Stroke -RL-2

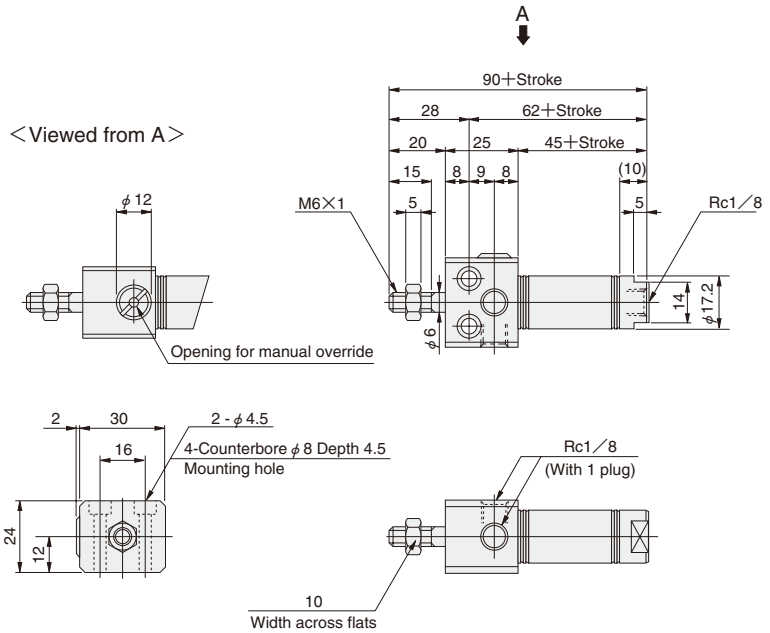

● φ 20～φ 40 DABK Bore size × Stroke -RL-2

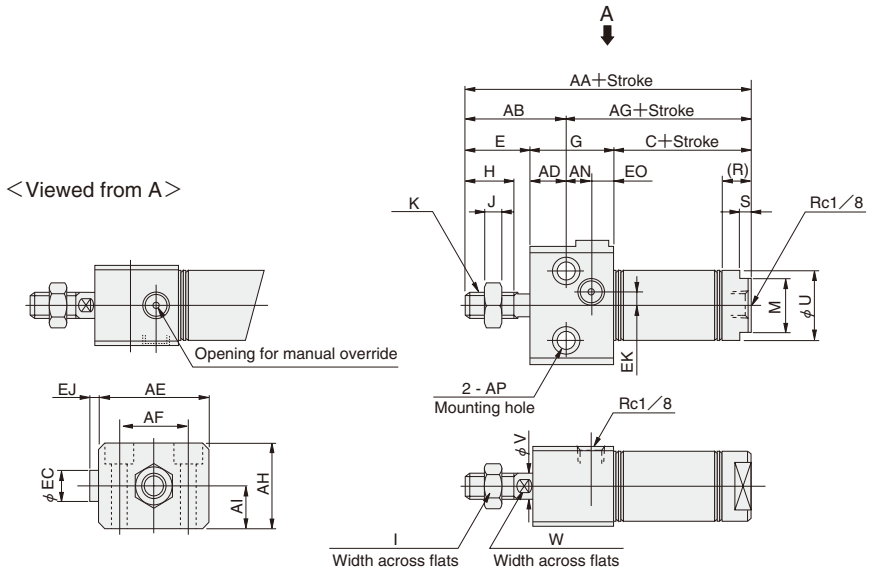

●The drawing is for the φ 20 and φ 25. (Contour dimensions of the φ 32 and φ 40 head covers are smaller than the block portion.)

Bore mm [in.] / Code	C	E	G	H	I	J	K	M	R	S	U	V	W
20 [0.787]	53	23	28	15	12	5	M8×1	17	10	5	21.4	8	6
25 [0.984]	53	26	30	18	14	6	M10×1.25	19	10	5	26.4	10	8
32 [1.260]	54	31	36	23	14	6	M10×1.25	22	11	6	33.6	12	10
40 [1.575]	60	31	50	23	19	8	M14×1.5	22	13	6	41.6	16	14

Bore mm [in.] / Code	AA	AB	AD	AE	AF	AG	AH	AI	AN	AP	EC	EJ	EK	EO
20 [0.787]	104	34	11	38	22	70	28	14	9	φ 6.6 Counterbore φ 11 Depth6.5	12	4	0	8
25 [0.984]	109	38	12	42	26	71	30	15	10	φ 6.6 Counterbore φ 11 Depth6.5	12	3	0	8
32 [1.260]	121	42	11	54	34	79	36	18	14	φ 9 Counterbore φ 14 Depth8.6	17.5	5	7.5	11
40 [1.575]	141	48	17	68	46	93	44	22	19	φ 11 Counterbore φ 17.5 Depth10.8	—	0	10	14

-RL Dimensions of Rod Side End Keep, Side Mounting Type (mm)

● ϕ 50, ϕ 63 **DABK** Bore size × Stroke **-RL-2**

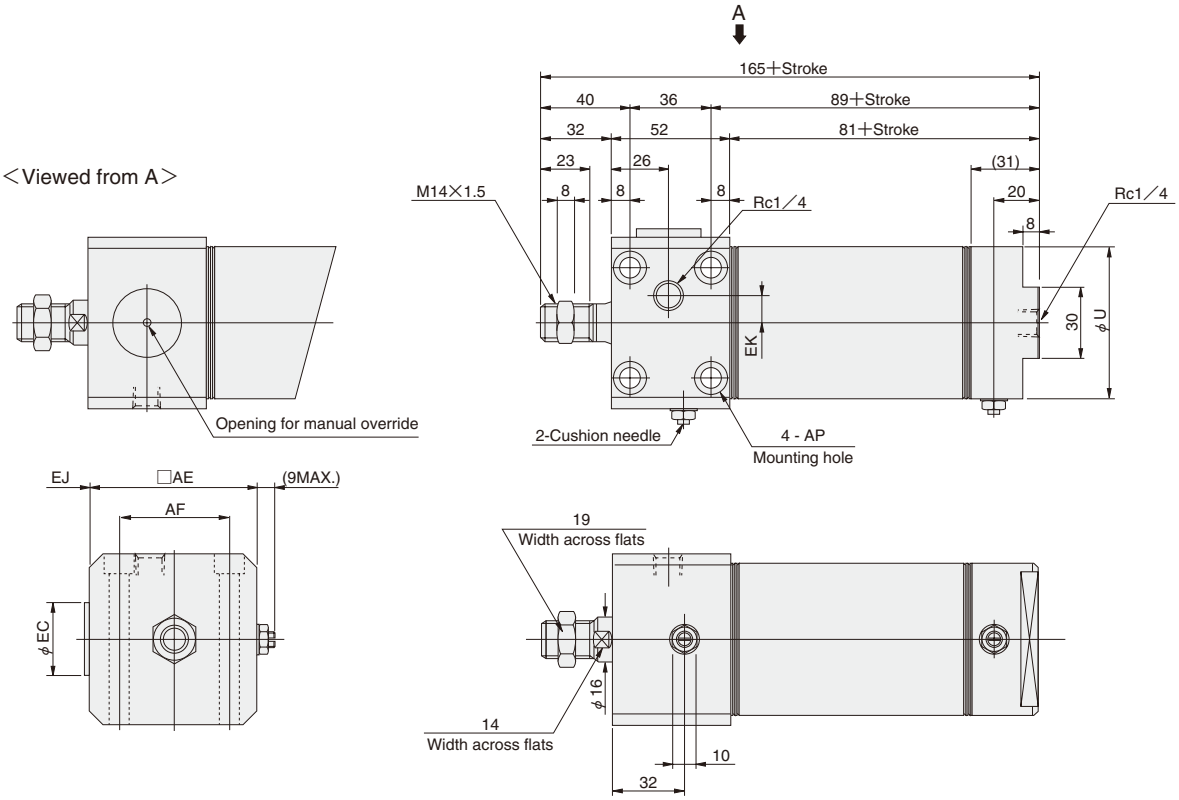

Bore mm [in.] \ Code	U	AE	AF	AP	EC	EJ	EK
50 [1.969]	52	62	44	ϕ 6.6 Counterbore ϕ 11 Depth6.5	30	6	10
63 [2.480]	65.4	74	48	ϕ 6.6 Counterbore ϕ 11 Depth6.5	—	0	10

-RL Dimensions of Rod Side End Keep, Front Mounting Type (mm)

● φ16 DABK16 × Stroke -RL-4

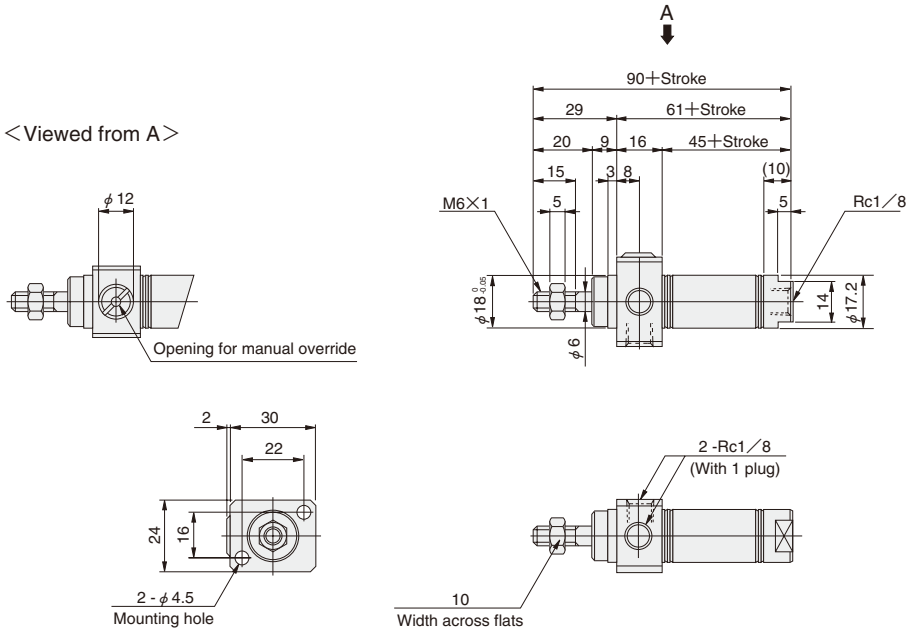

● φ20～φ40 DABK Bore size × Stroke -RL-4

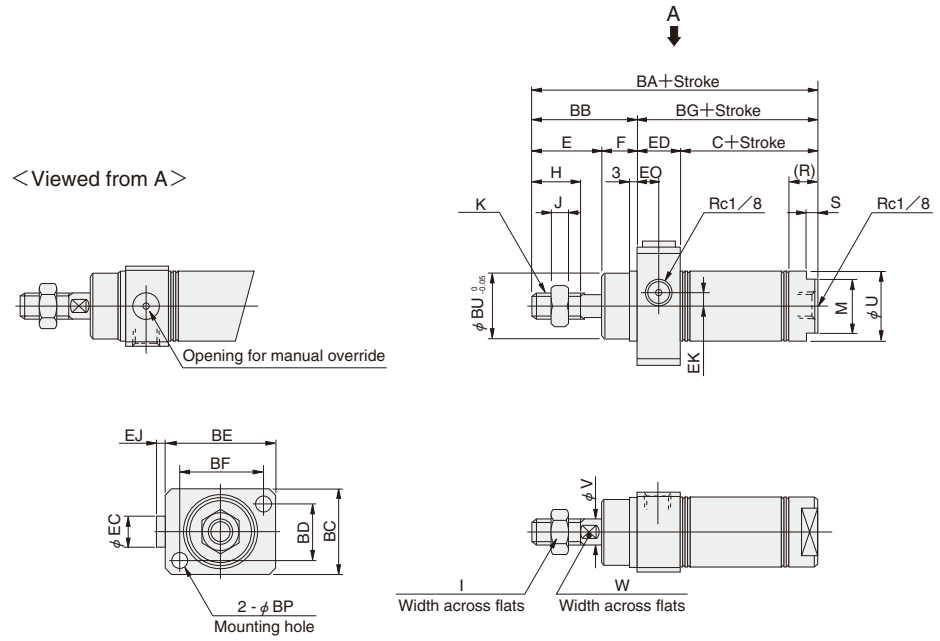

●The drawing is for the φ20 and φ25. (Contour dimensions of the φ32 and φ40 head covers are smaller than the block portion.)

Bore mm [in.] \ Code	C	E	F	H	I	J	K	M	R	S	U	V	W
20 [0.787]	53	23	12	15	12	5	M8×1	17	10	5	21.4	8	6
25 [0.984]	53	26	14	18	14	6	M10×1.25	19	10	5	26.4	10	8
32 [1.260]	54	31	14	23	14	6	M10×1.25	22	11	6	33.6	12	10
40 [1.575]	60	31	14	23	19	8	M14×1.5	22	13	6	41.6	16	14

Bore mm [in.] \ Code	BA	BB	BC	BD	BE	BF	BG	BP	BU	EC	ED	EJ	EK	EO
20 [0.787]	104	35	28	18	38	28	69	5.5	22		16	4	0	8
25 [0.984]	109	40	30	20	42	32	69	5.5	24	12	16	3	0	8
32 [1.260]	124	45	36	24	54	42	79	6.6	28		25	5	7.5	11
40 [1.575]	131	45	44	28	68	52	86	9	34	12	26	0	10	14

-RL Dimensions of Rod Side End Keep, Front Mounting Type (mm)

● ϕ 50, ϕ 63 **DABK** Bore size × Stroke **-RL-4**

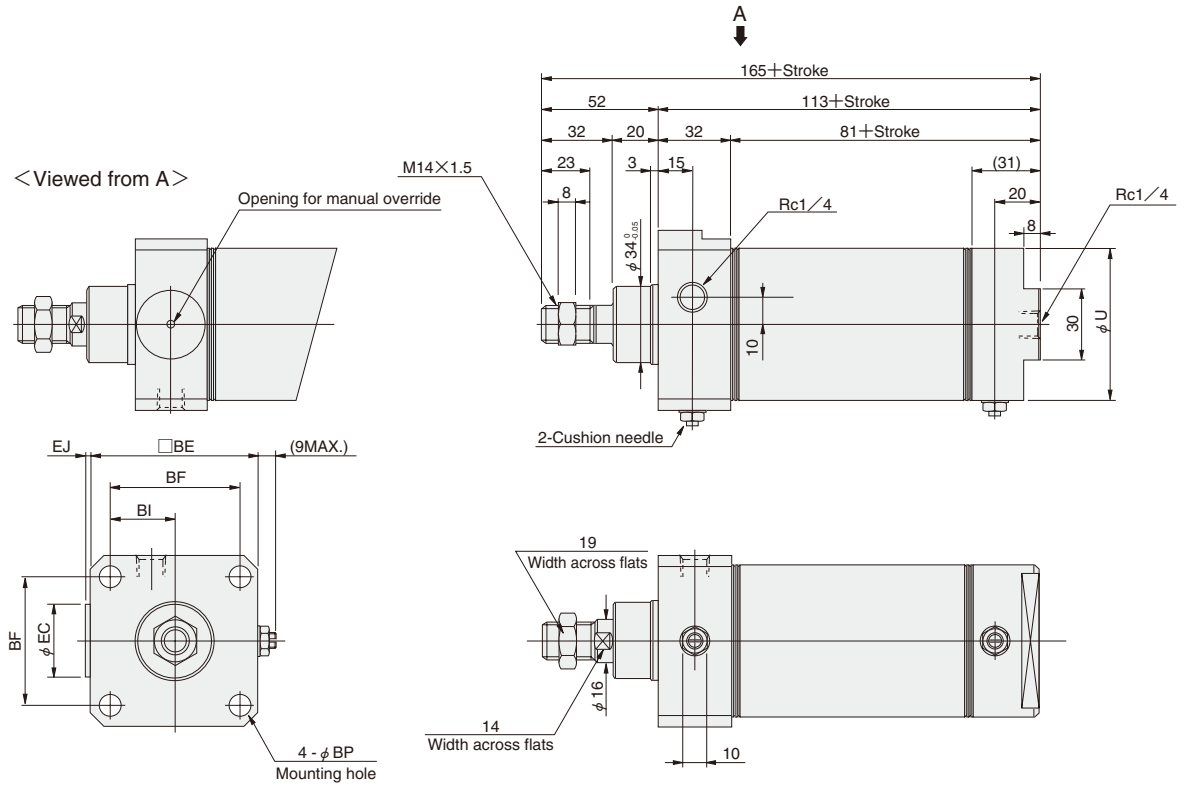

Bore mm [in.] \ Code	U	BE	BF	BI	BP	EC	EJ
50 [1.969]	52	62	48	24	6.6	30	6
63 [2.480]	65.4	74	58	29	9	—	0

Mounting Location of Sensor Switch

When the sensor switch is mounted in the location shown in the diagram (figures in the tables are reference values), the magnet comes to the sensor switch's maximum sensing location at the end of the stroke.

● Block cylinder, side mount

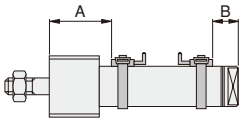

● Block cylinder, front mount

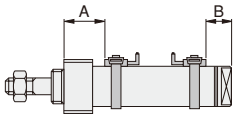

●-HL : Head side end keep

mm [in.]

Sensor switch model	Code \ Bore size	Block cylinder													
		Side mount							Front mount						
		16 [0.630]	20 [0.787]	25 [0.984]	32 [1.260]	40 [1.575]	50 [1.969]	63 [2.480]	16 [0.630]	20 [0.787]	25 [0.984]	32 [1.260]	40 [1.575]	50 [1.969]	63 [2.480]
ZG530□	A	32 [1.260]	39 [1.535]	41 [1.614]	47 [1.850]	57 [2.244]	66 [2.598]	66 [2.598]	23 [0.906]	27 [1.063]	27 [1.063]	27 [1.063]	29 [1.142]	36 [1.417]	36 [1.417]
ZG553□	B	26 [1.024]	27 [1.063]	27 [1.063]	39 [1.535]	44 [1.732]	47 [1.850]	47 [1.850]	26 [1.024]	27 [1.063]	39 [1.535]	39 [1.535]	44 [1.732]	47 [1.850]	47 [1.850]
CS□M	A	32 [1.260]	39 [1.535]	41 [1.614]	47 [1.850]	57 [2.244]	66 [2.598]	66 [2.598]	23 [0.906]	27 [1.063]	27 [1.063]	27 [1.063]	29 [1.142]	36 [1.417]	36 [1.417]
	B	26 [1.024]	27 [1.063]	27 [1.063]	39 [1.535]	44 [1.732]	47 [1.850]	47 [1.850]	26 [1.024]	27 [1.063]	39 [1.535]	39 [1.535]	44 [1.732]	47 [1.850]	47 [1.850]
CS□F	A	—	36 [1.417]	38 [1.496]	44 [1.732]	54 [2.126]	64 [2.520]	64 [2.520]	—	24 [0.945]	24 [0.945]	24 [0.945]	26 [1.024]	34 [1.339]	34 [1.339]
	B	—	24 [0.945]	24 [0.945]	38 [1.496]	41 [1.614]	46 [1.811]	46 [1.811]	—	24 [0.945]	38 [1.496]	38 [1.496]	41 [1.614]	46 [1.811]	46 [1.811]

●-RL : Rod side end keep

mm [in.]

Sensor switch model	Code \ Bore size	Block cylinder													
		Side mount							Front mount						
		16 [0.630]	20 [0.787]	25 [0.984]	32 [1.260]	40 [1.575]	50 [1.969]	63 [2.480]	16 [0.630]	20 [0.787]	25 [0.984]	32 [1.260]	40 [1.575]	50 [1.969]	63 [2.480]
ZG530□	A	32 [1.260]	39 [1.535]	41 [1.614]	47 [1.850]	63 [2.480]	66 [2.598]	66 [2.598]	23 [0.906]	27 [1.063]	27 [1.063]	36 [1.417]	39 [1.535]	46 [1.811]	46 [1.811]
ZG553□	B	16 [0.630]	20 [0.787]	20 [0.787]	21 [0.827]	25 [0.984]	44 [1.732]	44 [1.732]	16 [0.630]	20 [0.787]	20 [0.787]	21 [0.827]	25 [0.984]	44 [1.732]	44 [1.732]
CS□M	A	32 [1.260]	39 [1.535]	41 [1.614]	47 [1.850]	63 [2.480]	66 [2.598]	66 [2.598]	23 [0.906]	27 [1.063]	27 [1.063]	36 [1.417]	39 [1.535]	46 [1.811]	46 [1.811]
	B	16 [0.630]	20 [0.787]	20 [0.787]	21 [0.827]	25 [0.984]	44 [1.732]	44 [1.732]	16 [0.630]	20 [0.787]	20 [0.787]	21 [0.827]	25 [0.984]	44 [1.732]	44 [1.732]
CS□F	A	—	36 [1.417]	38 [1.496]	44 [1.732]	60 [2.362]	64 [2.520]	64 [2.520]	—	24 [0.945]	24 [0.945]	27 [1.063]	36 [1.417]	44 [1.732]	44 [1.732]
	B	—	17 [0.669]	17 [0.669]	18 [0.709]	20 [0.787]	42 [1.654]	42 [1.654]	—	17 [0.669]	17 [0.669]	18 [0.709]	20 [0.787]	42 [1.654]	42 [1.654]

Handling Instructions and Precautions

Control circuit

For control of Slim End Keep Cylinders, we recommend the use of 2-position, 4-, 5-port valves. Avoid the use of a control circuit of exhaust centers with 3-position valves or other control circuits that exhaust air from 2 delivery ports.

Notes: 1. It is dangerous to supply air to a connection port on a side with a locking mechanism while already exhausted, because the piston rod could suddenly extend (or retract). In addition, since it could also cause galling of the lock piston and piston rod, resulting in defective operation. Always supply air to the connection port on the opposite side to ensure that back pressure is applied.
2. When restarting operations after air has been exhausted from the cylinder due to completion of operations or to an emergency stop, always start by supplying air to the connection port on the opposite side of the locking mechanism.

Manual operation

While the locking mechanism is normally released automatically through cylinder operations, it can also be released manually. For manual release, insert an M3 × 0.5 (M2.5×0.45 for ϕ16) screw that has 30mm [1.18in.] below head length into the opening for manual override, thread it in about 3 turns into the internal lock piston, and then pull up the screw. To maintain the manual override for adjustment, etc., thread the locknut onto the screw and, with the locking mechanism in a released state, tighten the locknut against the cylinder.

Notes: 1. It is dangerous to release the lock when a load (weight) is present on the piston rod, because it may cause a sudden fall or cause the unintended piston rod's extension (or retraction). In this case, always supply air to the connection port opposite the one adjacent to the locking mechanism before releasing the locking mechanism.
2. If the locking mechanism cannot easily be released even with manual override, it could be the result of galling of the lock piston and piston rod. In this case, supply air to the connection port opposite the one adjacent to the locking mechanism before releasing the locking mechanism.

General precautions

Media

1. Use air for the media. For the use of any other media, consult us.
2. Air used for the cylinder should be clean air that contains no deteriorated compressor oil, etc. Install an air filter (filtration of a minimum 40 μm) near the cylinder or valve to remove collected liquid or dust. In addition, drain the air filter periodically.
   Collected liquid or dust entering the cylinder may cause improper operation.

Lubrication

The product can be used without lubrication, if lubrication is required, use Turbine Oil Class 1 (ISO VG32) or equivalent.
Avoid using spindle oil or machine oil.

Atmosphere

1. Because water, oil, dust, etc., entering the opening for manual override may cause defective locks or other erratic operation. If using in locations subject to dripping water, dripping oil etc., or to large amounts of dust, use a cover to protect the unit.
2. The product cannot be used when the media or ambient atmosphere contains any of the substances listed below.
   Organic solvents, phosphate ester type hydraulic oil, sulphur dioxide, chlorine gas, or acids, etc.

SLIM TANDEM CYLINDERS

Symbol

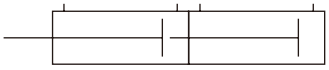

Specifications

Item / Bore size mm [in.]	20, 25, 32, 40 [0.787, 0.984, 1.260, 1.575]
Operation type	Double acting type
Media	Air
Mounting type	Basic type, Foot type, Flange type, Pivot type
Operating pressure range MPa [psi.]	0.08～0.9 [12～131]
Proof pressure MPa [psi.]	1.32 [191]
Operating temperature range °C [°F]	0～70 [32～158]
Operating speed range mm/s [in./sec.]	50～800 [2.0～31.5]
Cushion	Fixed type (Rubber bumper)
Lubrication	Not required
Port size Rc	1/8

Bore Size and Stroke

mm

Bore size \ Stroke1 (Standard)	25	50	75	100	150	Maximum available stroke
20	0 25 50 75 100 150 200					650
25	0 25 50 75 100 150 200 250					
32	0 25 50 75 100 150 200 250 300					
40	0 25 50 75 100 150 200 250 300 350 400					

Note: Figures in the table are combination of stroke 1 (standard) and its corresponding stroke 2 (standard).
Stroke 1 is available up to 150 strokes.

Operation of Tandem Cylinders

Tandem Cylinders are a set of 2 cylinders joined end to end.
It can be used as a 2-stage stroke cylinder by supplying air to either Port A or Port B. It can also obtain twice the thrust within the “stroke 1” range.

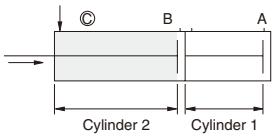

The rod retracts stroke 2 and stroke 1 when air is supplied from Port Ⓒ.

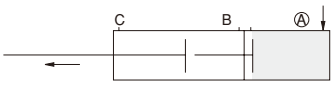

The rod moves stroke 1 when air is supplied from Port Ⓐ.

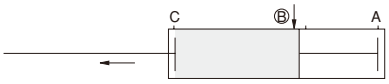

The rod moves stroke 2 when air is supplied from Port Ⓑ.

Twice the thrust is obtained within the stroke 1 range when air is supplied from Ports Ⓐ and Ⓑ.

Order Codes

DA T 20×50×50 – □ – □ – □ – □ □ □

Bore size × Stroke1 × Stroke2

Tandem cylinder

Slim double acting cylinder

● **About stroke 1 and stroke 2**

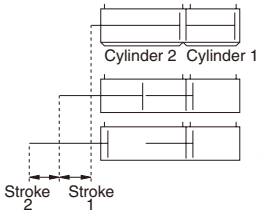

Stroke 1 is the stroke of cylinder 1.
Stroke 2 is obtained by subtracting stroke 1 from the stroke of cylinder 2.

Head cover specification
Blank — Standard head
A —— Short head

Mounting type
Blank — Basic type
1 —— Foot mounting type
3 —— Flange mounting type
8E —— Pivot mounting type with supporting bracket (with pin)
● Mounting brackets are included at shipping.

Rod end accessory
Blank — No rod end accessory
I —— I type knuckle
Y —— Y type knuckle (with pin)
● For the cylinder joint and cylinder rod end, see p.1568.

Sensor switch (for cylinders with sensor switches)

Blank	No sensor switch		
ZG530	2-lead wire Solid state type	with indicator lamp	DC10～28V
ZG553	3-lead wire Solid state type	with indicator lamp	DC4.5～28V
CS3M	Reed switch type	with indicator lamp	DC10～30V AC85～230V
CS4M	Reed switch type	with indicator lamp	DC10～30V AC85～115V
CS5M	Reed switch type	without indicator lamp	DC3～30V AC85～115V
CS2F	Reed switch type	with indicator lamp	AC85～230V
CS3F	Reed switch type	with indicator lamp	DC10～30V
CS4F	Reed switch type	with indicator lamp	DC10～30V
CS5F	Reed switch type	without indicator lamp	DC3～30V

● For details of sensor switches, see p.1544.
● **CS□F** comes with DIN connector.
All others are grommet type.

Lead wire length
(Applies to all except **CS□F**)
A —— 1000mm [39in.]
B —— 3000mm [118in.]

Number of sensor switches
1 —— With 1 sensor switch
2 —— With 2 sensor switches
3 —— With 3 sensor switches
⋮ ⋮

Inner Construction and Major Parts (cannot be disassembled)

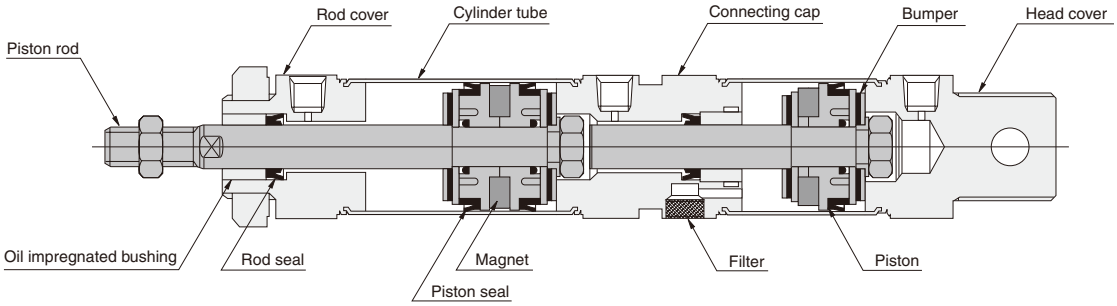

Major Parts and Materials

Parts \ Bore size	20～40
Cylinder tube	Stainless steel tube
Piston	Plastic
Piston rod	Steel (hard chrome plated)
Rod cover	Aluminum (anodized)
Head cover Connecting cap	
Seal	Synthetic rubber (NBR)
Bumper	
Magnet	Plastic magnet
Filter	Foamed metal

Seals

Note: Seals cannot be replaced.

mm

Parts / Quantity / Bore size	Rod seal	Piston seal
	2	3
20	NY-12×8×3.5	PPY-20
25	NY-14×10×3.5	PPY-25
32	NY-17×12×4	PPY-32
40	NY-22×16×5	PPY-40

Mounting Location of Sensor Switch

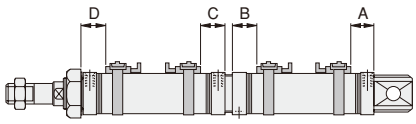

mm [in.]

Sensor switch model	Code \ Bore size	20 [0.787]	25 [0.984]	32 [1.260]	40 [1.575]
ZG530□ **ZG553□** **CS□M**	**A**	27 [1.063]	27 [1.063]	27 [1.063]	27 [1.063]
	B	16.5 [0.650]	16.5 [0.650]	17 [0.669]	15.5 [0.610]
	C	25 [0.984]	25 [0.984]	25 [0.984]	25 [0.984]
	D	27 [1.063]	27 [1.063]	27 [1.063]	27 [1.063]
CS□F	**A**	22 [0.866]	22 [0.866]	22 [0.866]	22 [0.866]
	B	11.5 [0.453]	11.5 [0.453]	12 [0.472]	10.5 [0.413]
	C	20 [0.787]	20 [0.787]	20 [0.787]	20 [0.787]
	D	22 [0.866]	22 [0.866]	22 [0.866]	22 [0.866]

Mass

kg [lb.]

Bore size mm [in.]	Zero stroke mass		Additional mass for each 1mm [0.0394in.] stroke		Mass of mounting bracket				
	Standard head	Short head	Stroke 1	Stroke 2	Foot bracket	Flange bracket	Pivot bracket	Y type knuckle	I type knuckle
20 [0.787]	0.30 [0.66]	0.26 [0.57]	0.0016 [0.0035]	0.0008 [0.0018]	0.14 [0.31]	0.08 [0.18]	0.06 [0.13]	0.041 [0.090]	0.036 [0.079]
25 [0.984]	0.35 [0.77]	0.34 [0.75]	0.0022 [0.0049]	0.0011 [0.0024]	0.16 [0.35]	0.08 [0.18]	0.06 [0.13]	0.075 [0.165]	0.070 [0.154]
32 [1.260]	0.45 [0.99]	0.43 [0.95]	0.003 [0.0066]	0.0015 [0.0033]	0.19 [0.42]	0.10 [0.22]	0.14 [0.31]	0.075 [0.165]	0.070 [0.154]
40 [1.575]	0.6 [1.32]	0.56 [1.23]	0.0048 [0.0106]	0.0024 [0.0053]	0.29 [0.64]	0.13 [0.29]	0.14 [0.31]	0.120 [0.265]	0.132 [0.291]

Calculation example: For tandem cylinder of 25mm bore size and stroke 1 of 50mm and stroke 2 of 100mm
0.35＋(0.0022×50)＋(0.0011×100)＝0.57kg [1.26lb.]

Dimensions of Tandem Cylinder Basic Type (mm)

● ϕ 20～ϕ 40 **DAT** Bore size × Stroke1 × Stroke2

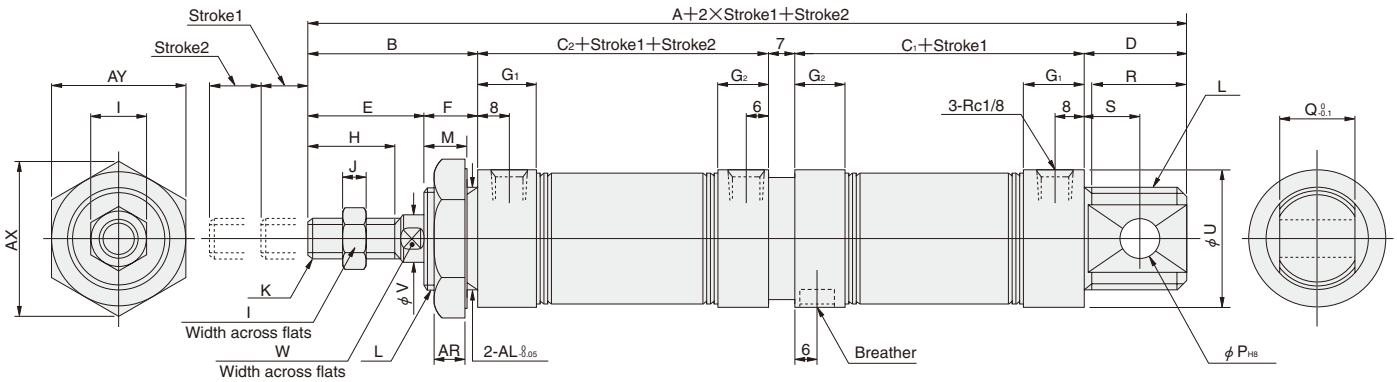

● **Short head**

DAT Bore size × Stroke1 × Stroke2 **-A**

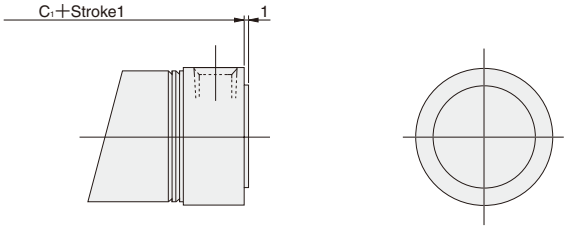

Bore mm [in.] \ Code	A	B	C1	C2	D	E	F	G1	G2	H	I	J	K	L	M	P	Q	R	S	AL	U	V	W	AR	AX	AY
20 [0.787]	203.5	35	66.5	74	21	23	12	16	14	15	12	5	M8×1	M20×1.5	10	8	12	19	12	20	27	8	6	7.5	31.2	27
25 [0.984]	208.5	40	66.5	74	21	26	14	16	14	18	14	6	M10×1.25	M22×1.5	12	8	12	19	12	22	29	10	8	9.5	34.6	30
32 [1.260]	220	45	67	74	27	31	14	16	14	23	14	6	M10×1.25	M27×2	12	10	20	25	15	27	35	12	10	9.5	41.6	36
40 [1.575]	218.5	45	65.5	74	27	31	14	14.5	12.5	23	19	8	M14×1.5	M33×2	12	10	20	25	15	33	41.6	16	14	9.5	47.3	41

Example of Air Circuit for Tandem Cylinders

See the following air circuit when using the tandem cylinder as a 2-staged stroke cylinder. Consult us for air circuits not shown below.

● For upward-operation cylinder

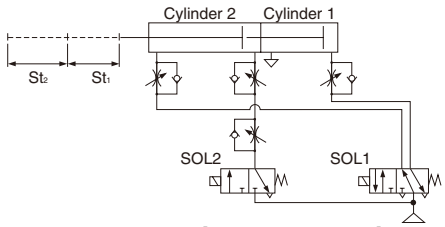

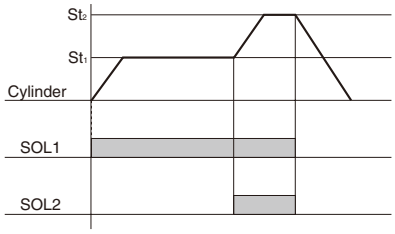

● For downward- or horizontal-operation cylinder

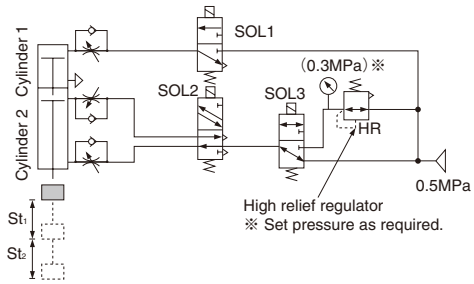

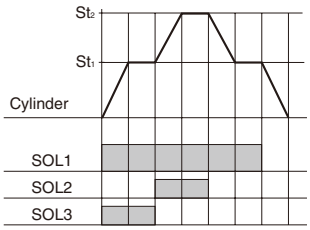

SLIM
DUAL STROKE CYLINDERS

Symbol

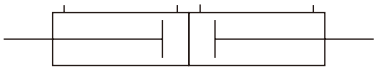

Specifications

Item / Bore size mm [in.]	20, 25, 32, 40 [0.787, 0.984, 1.260, 1.575]
Operation type	Double acting type
Media	Air
Mounting type	Basic type, Foot type, Flange type
Operating pressure range MPa [psi.]	0.04～0.9 [6～131]
Proof pressure MPa [psi.]	1.32 [191]
Operating temperature range °C [°F]	0～70 [32～158]
Operating speed range mm/s [in./sec.]	30～800 [1.2～31.5]
Cushion	Fixed type (Rubber bumper)
Lubrication	Not required
Port size Rc	1/8

Bore Size and Stroke

mm

Bore size \ Stroke 1 (Std.)	25	50	75	100	150	Maximum available stroke
20	0 25 50 75 100 150 200					650
25	0 25 50 75 100 150 200 250					
32	0 25 50 75 100 150 200 250 300					
40	0 25 50 75 100 150 200 250 300 350 400					

Note: Figures in the table are a combination of stroke 1 (standard) and the corresponding stroke 2 (standard).
Stroke 1 is available up to 150 strokes.

Order Codes

DA W 20×50×50 – □ – □ – □ □ □

DA — **Slim double acting cylinder**

W — **Dual stroke cylinder**

20×50×50 — **Bore size × Stroke1 × Stroke2**

Mounting type
Blank — Basic type
1 — Foot mounting type
3 — Flange mounting type
● Mounting brackets are included at shipping.

Rod end accessory
Blank — No rod end accessory
I — I type knuckle
Y — Y type knuckle (with pin)
● For the cylinder joint and cylinder rod end, see p.1568.

Sensor switch (for cylinders with sensor switches)

Blank	No sensor switch		
ZG530	2-lead wire Solid state type	with indicator lamp	DC10～28V
ZG553	3-lead wire Solid state type	with indicator lamp	DC4.5～28V
CS3M	Reed switch type	with indicator lamp	DC10～30V AC85～230V
CS4M	Reed switch type	with indicator lamp	DC10～30V AC85～115V
CS5M	Reed switch type	without indicator lamp	DC3～30V AC85～115V
CS2F	Reed switch type	with indicator lamp	AC85～230V
CS3F	Reed switch type	with indicator lamp	DC10～30V
CS4F	Reed switch type	with indicator lamp	DC10～30V
CS5F	Reed switch type	without indicator lamp	DC3～30V

● For details of sensor switches, see p.1544.
● **CS□F** comes with DIN connector.
All others are grommet type.

Lead wire length
(Applies to all except **CS□F**)
A — 1000mm [39in.]
B — 3000mm [118in.]

Number of sensor switches
1 — With 1 sensor switch
2 — With 2 sensor switches
3 — With 3 sensor switches
⋮ ⋮

Inner Construction and Major Parts (cannot be disassembled)

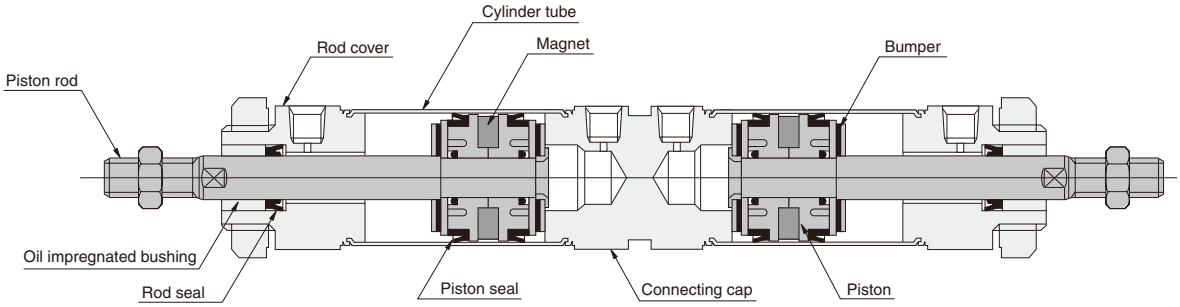

Major Parts and Materials

Parts \ Bore size	20～40
Cylinder tube	Stainless steel
Piston	Plastic
Piston rod	Steel (hard chrome plated)
Rod cover	Aluminum (anodized)
Head cover	
Seal	Synthetic rubber (NBR)
Bumper	
Magnet	Plastic magnet

Seals

Note: Seals cannot be replaced.

mm

Parts	Rod seal	Piston seal
Bore size \ Quantity	2	4
20	NY-12×8×3.5	PPY-20
25	NY-14×10×3.5	PPY-25
32	NY-17×12×4	PPY-32
40	NY-22×16×5	PPY-40

Mounting Location of Sensor Switch

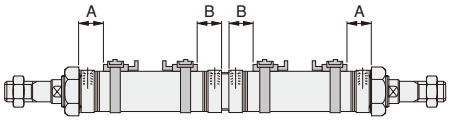

mm [in.]

Sensor switch model	Code \ Bore size	20 [0.787]	25 [0.984]	32 [1.260]	40 [1.575]
ZG530□ ZG553□ CS□M	**A**	27 [1.063]	27 [1.063]	27 [1.063]	27 [1.063]
	B	25 [0.984]	25 [0.984]	25 [0.984]	25 [0.984]
CS□F	**A**	22 [0.866]	22 [0.866]	22 [0.866]	22 [0.866]
	B	20 [0.787]	20 [0.787]	20 [0.787]	20 [0.787]

Mass

kg [lb.]

Bore size mm [in.]	Zero stroke mass	Additional mass for each 1mm [0.0394in.] stroke		Mass of mounting bracket			
		Stroke 1	Stroke 2	Foot bracket	Flange bracket	Y type knuckle	I type knuckle
20 [0.787]	0.30 [0.66]	0.0008 [0.0018]	0.0008 [0.0018]	0.14 [0.31]	0.08 [0.18]	0.041 [0.090]	0.036 [0.079]
25 [0.984]	0.39 [0.86]	0.0011 [0.0024]	0.0011 [0.0024]	0.16 [0.35]	0.08 [0.18]	0.075 [0.165]	0.070 [0.154]
32 [1.260]	0.60 [1.32]	0.0015 [0.0033]	0.0015 [0.0033]	0.19 [0.42]	0.10 [0.22]	0.075 [0.165]	0.070 [0.154]
40 [1.575]	0.90 [1.98]	0.0024 [0.0053]	0.0024 [0.0053]	0.29 [0.64]	0.13 [0.29]	0.120 [0.265]	0.132 [0.291]

Calculation example: For dual stroke cylinder of 25mm bore size and stroke 1 of 50mm and stroke 2 of 100mm
0.39＋(0.0011×50＋0.0011×100)＝0.555kg [1.224lb.]

Dimensions of Dual Stroke Basic Type (mm)

● ϕ 20～ϕ 40 **DAW** Bore size × Stroke1 × Stroke2

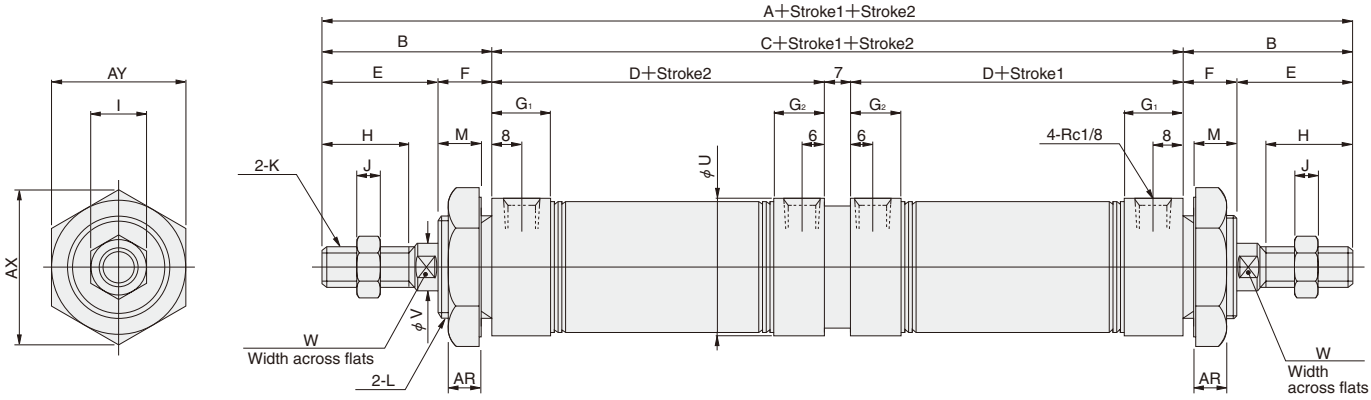

Bore mm [in.] \ Code	A	B	C	D	E	F	G_1	G_2	H	I	J	K	L	M	U	V	W	AR	AX	AY
20 [0.787]	225	35	155	74	23	12	16	14	15	12	5	M8×1	M20×1.5	10	27	8	6	7.5	31.2	27
25 [0.984]	235	40	155	74	26	14	16	14	18	14	6	M10×1.25	M22×1.5	12	29	10	8	9.5	34.6	30
32 [1.260]	245	45	155	74	31	14	16	14	23	14	6	M10×1.25	M27×2	12	35	12	10	9.5	41.6	36
40 [1.575]	245	45	155	74	31	14	14.5	12.5	23	19	8	M14×1.5	M33×2	12	41.6	16	14	9.5	47.3	41

Operation of Dual Stroke Cylinders

Dual Stroke Cylinders are a set of 2 cylinders connected back to back.
The cylinder body can be secured in place and each stroke can be controlled separately. It can also be used to obtain 2-stage or 3-stage strokes by securing the piston rod on one side in place.

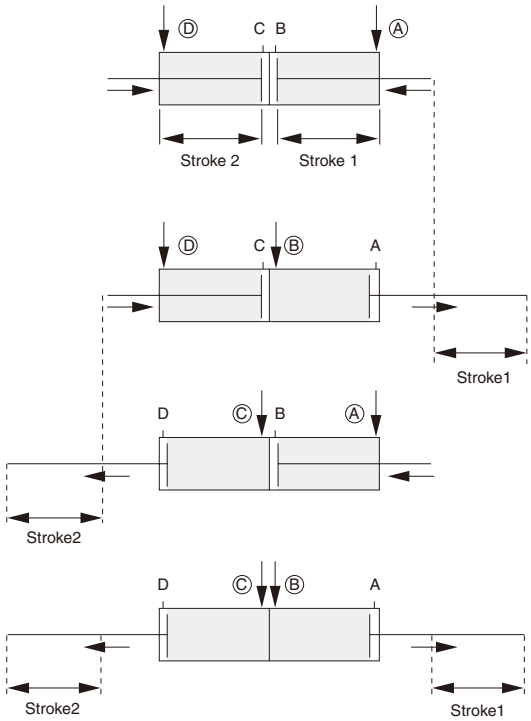

The rods retract stroke 2 and stroke 1 when air is supplied from Ports Ⓐ and Ⓓ.

The rod moves stroke 1 when air is supplied from Ports Ⓑ and Ⓓ.

The rod moves stroke 2 when air is supplied from Ports Ⓐ and Ⓒ.

The rod moves stroke 1 and stroke 2 when air is supplied from Ports Ⓑ and Ⓒ.

SLIM HEAT RESISTANT SPECIFICATION CYLINDERS

Symbol

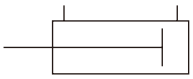

Specifications

Item / Bore size mm [in.]	20, 25, 32, 40 [0.787, 0.984, 1.260, 1.575]
Operation type	Double acting type
Media	Air
Mounting type	Basic type, Foot type, Flange type, Pivot type
Operating pressure range MPa [psi.]	0.1～0.9 [15～131]
Proof pressure MPa [psi.]	1.32 [191]
Operating temperature range °C [°F]	0～130 [32～266]
Operating speed range mm/s [in./sec.]	100～700 [3.9～27.6]
Cushion	Fixed type (Rubber bumper)
Lubrication	Not required
Port size Rc	1/8

Cylinder Bore Size and Stroke

mm

Bore size	Standard strokes	Maximum stroke	Maximum available stroke
20	25 50 75 100 125 150	200	500
25	25 50 75 100 125 150 200	250	
32	25 50 75 100 125 150 200	300	
40	25 50 75 100 125 150 200 250 300	400	

Remarks 1: Stroke tolerance $^{+1}_{0}$ [$^{+0.039in.}_{0}$]
2: For non-standard strokes, consult us.
3: The minimum operating pressure when the stroke is over the maximum stroke at bore size of ϕ20~ϕ40 is 0.2MPa [29psi.].

Order Codes

DA F 20×50 – □ – □ – □

Caution Since a magnet for sensor switch is not built into the heat resistant specification cylinder, sensor switches will not be functional.

Bore size × Stroke

Rod end accessory
Blank — No rod end accessory
I — I type knuckle
Y — Y type knuckle (with pin)

Heat resistant specification

Mounting type
Blank — Basic type
1 — Foot mounting type
3 — Flange mounting type
8E — Pivot mounting type with supporting bracket (with pin)
● Mounting brackets are included at shipping.

Slim double acting cylinder

Head cover specification
Blank — Standard head
A — Short head

Major Parts and Materials

Parts \ Bore size	20, 25, 32, 40
Cylinder tube	Stainless steel
Piston	Aluminum (anodized)
Piston rod	Steel (hard chrome plated)
Rod cover	Aluminum (anodized)
Head cover	
Seal	Fluoro rubber (FKM)
Bumper	

Dimensions of Heat Resistant Specification Cylinder Basic Type (mm)

● ϕ 20～ϕ 40 **DAF** Bore size × Stroke

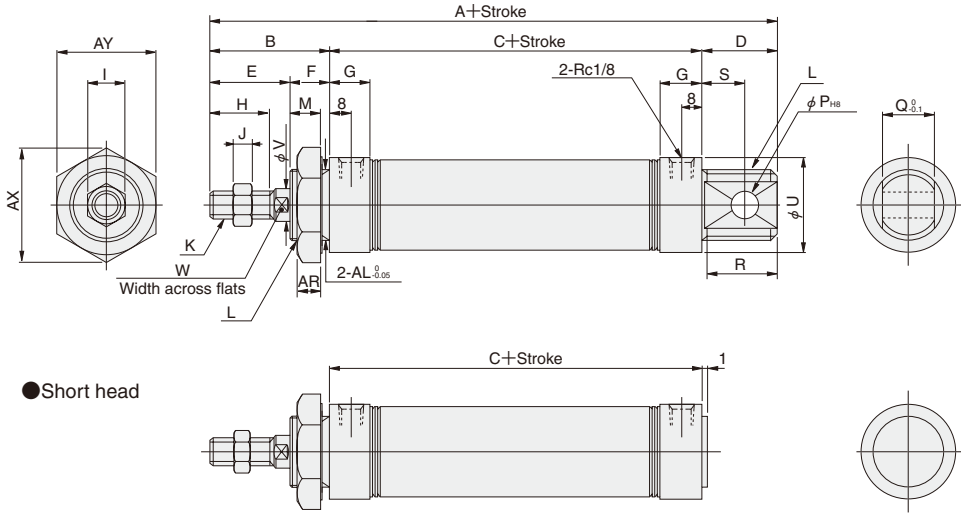

Bore mm [in.] \ Code	A	B	C	D	E	F	G	H	I	J	K	L	M	P	Q	R	S	U	V	W
20 [0.787]	132	35	76	21	23	12	16	15	12	5	M8×1	M20×1.5	10	8	12	19	12	27	8	6
25 [0.984]	137	40	76	21	26	14	16	18	14	6	M10×1.25	M22×1.5	12	8	12	19	12	29	10	8
32 [1.260]	148	45	76	27	31	14	16	23	14	6	M10×1.25	M27×2	12	10	20	25	15	35	12	10
40 [1.575]	148	45	76	27	31	14	(14.5)	23	19	8	M14×1.5	M33×2	12	10	20	25	15	41.6	16	14

Bore mm [in.] \ Code	AR	AX	AY	AL
20 [0.787]	7.5	31.2	27	20
25 [0.984]	9.5	34.6	30	22
32 [1.260]	9.5	41.6	36	27
40 [1.575]	9.5	47.3	41	33

SLIM
LOW SPEED CYLINDERS

Symbol

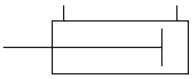

Specifications

Item \ Bore size mm [in.]	20, 25, 32, 40 [0.787, 0.984, 1.260, 1.575]	50, 63 [1.969, 2.480]
Operation type	Double acting type	
Media	Air	
Mounting type	Basic type, Foot type, Flange type, Pivot type	
Operating pressure range MPa [psi.]	0.06～0.9 [9～131]	0.05～0.7 [7～102]
Proof pressure MPa [psi.]	1.32 [191]	1.03 [149]
Operating temperature range °C [°F]	0～60 [32～140]	
Operating speed range Note mm/s [in./sec.]	10～500 [0.4～19.7]	10～300 [0.4～11.8]
Cushion	Fixed type (Rubber bumper)	Variable type is standard equipment. (Stroke15mm [0.59in.])
Lubrication	Not required	
Port size Rc	1/8	1/4

Note: When mounting and using sensor switches other than ZG530 and ZG553, maintain the minimum speed at 30mm/s [1.2in./sec.] or more.

Bore Size and Stroke

mm

Bore size	Standard strokes	Maximum stroke	Maximum available stroke
20	25 50 75 100 125 150	200	500
25	25 50 75 100 125 150 200	250	
32	25 50 75 100 125 150 200	300	
40	25 50 75 100 125 150 200 250 300	400	
50	25 50 75 100 150 200	300	
63	25 50 75 100 150 200	300	

Remarks: 1. Stroke tolerance $^{+1}_{0}$ [$^{+0.039in.}_{0}$]
2. For non-standard strokes, consult us.
3. The minimum operating pressure when the stroke is over the maximum stroke at bore size of ϕ20～ϕ40 is 0.2MPa [29psi.].

Order Codes

DA **N** **20×50** – □ – □ – □ – □ □ □

Bore size × Stroke

Low speed cylinder

Slim double acting cylinder

Head cover specification
Blank — Standard head
A — Short head

Mounting type
Blank — Basic type
1 — Foot mounting type
3 — Flange mounting type
8B — Pivot mounting type with bushing (Available at ϕ50 and ϕ63 only)
8E — Pivot mounting type with supporting bracket (with pin) (Available at ϕ20～40 only)
8B-8E — Pivot mounting type with bushing and supporting bracket (with pin) (Available at ϕ50 and ϕ63 only)
● Mounting brackets are included at shipping.

Rod end accessory
Blank — No rod end accessory
I — I type knuckle
Y — Y type knuckle (with pin)
● For the cylinder joint and cylinder rod end, see p.1568.

Sensor switch (for cylinders with sensor switches)

Blank	No sensor switch		
ZG530	2-lead wire Solid state type	with indicator lamp	DC10～28V
ZG553	3-lead wire Solid state type	with indicator lamp	DC4.5～28V
CS3M	Reed switch type	with indicator lamp	DC10～30V AC85～230V
CS4M	Reed switch type	with indicator lamp	DC10～30V AC85～115V
CS5M	Reed switch type	without indicator lamp	DC3～30V AC85～115V
CS2F	Reed switch type	with indicator lamp	AC85～230V
CS3F	Reed switch type	with indicator lamp	DC10～30V
CS4F	Reed switch type	with indicator lamp	DC10～30V
CS5F	Reed switch type	without indicator lamp	DC3～30V

● For details of sensor switches, see p.1544.
● **CS□F** comes with DIN connector. All others are grommet type.
Note: When mounting and using sensor switches other than ZG530 and ZG553, maintain the minimum speed at 30mm/s [1.2in./sec.] or more.

Lead wire length
(Applies to all except **CS□F**)
A — 1000mm [39in.]
B — 3000mm [118in.]

Number of sensor switches
1 — With 1 sensor switch
2 — With 2 sensor switches
3 — With 3 sensor switches
⋮ ⋮

Dimensions of Low Speed Cylinder Basic Type (mm)

● φ 20～φ 40 DAN Bore size × Stroke

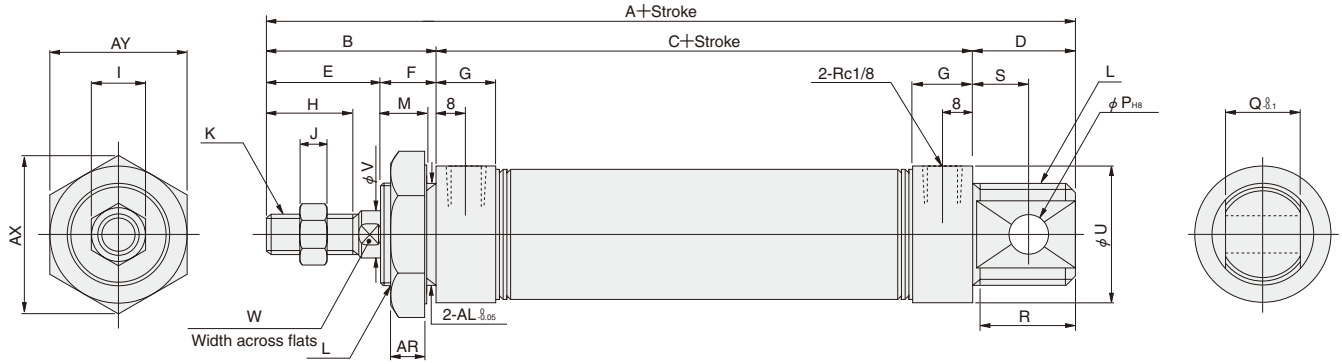

●Short head

DAN Bore size × Stroke -A

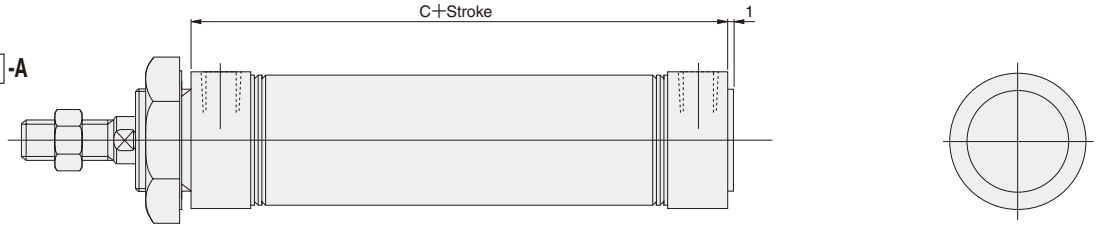

Bore mm [in.] \ Code	A	B	C	D	E	F	G	H	I	J	K	L	M	P	Q	R	S	U	V	W
20 [0.787]	132	35	76	21	23	12	16	15	12	5	M8×1	M20×1.5	10	8	12	19	12	27	8	6
25 [0.984]	137	40	76	21	26	14	16	18	14	6	M10×1.25	M22×1.5	12	8	12	19	12	29	10	8
32 [1.260]	148	45	76	27	31	14	16	23	14	6	M10×1.25	M27×2	12	10	20	25	15	35	12	10
40 [1.575]	148	45	76	27	31	14	(14.5)	23	19	8	M14×1.5	M33×2	12	10	20	25	15	41.6	16	14

Bore mm [in.] \ Code	AR	AX	AY	AL
20 [0.787]	7.5	31.2	27	20
25 [0.984]	9.5	34.6	30	22
32 [1.260]	9.5	41.6	36	27
40 [1.575]	9.5	47.3	41	33

● φ 50, φ 63 DAN Bore size × Stroke

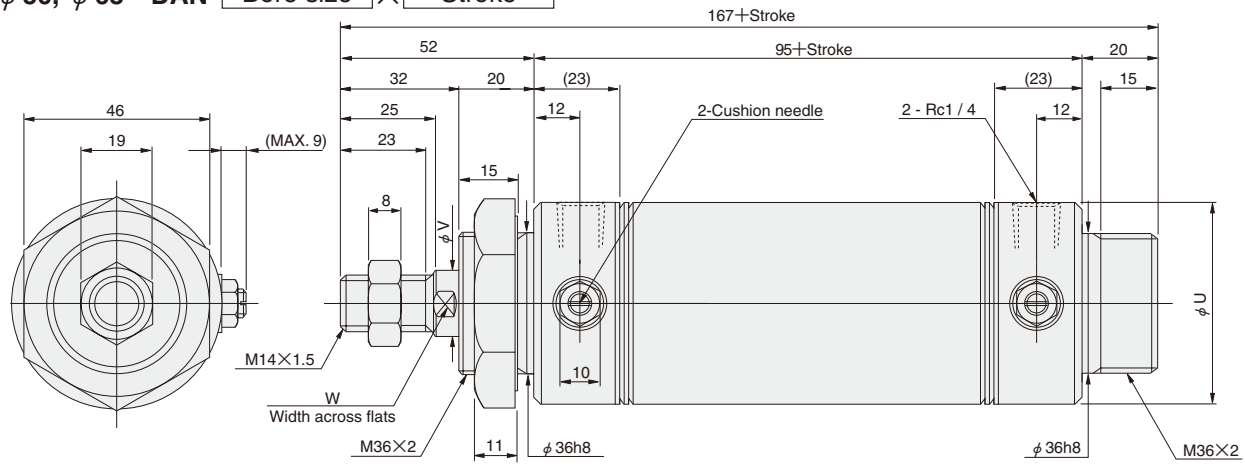

●Short head DAN Bore size × Stroke -A

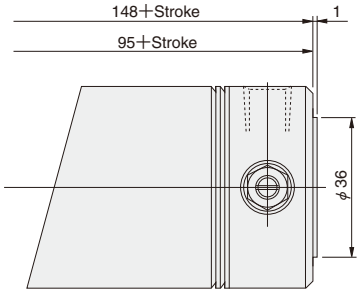

Bore mm [in.] \ Code	U	V	W
50 [1.969]	52	16	14
63 [2.480]	65.4	16	14

●Pivot mounting type with bushing DAN Bore size × Stroke -8B

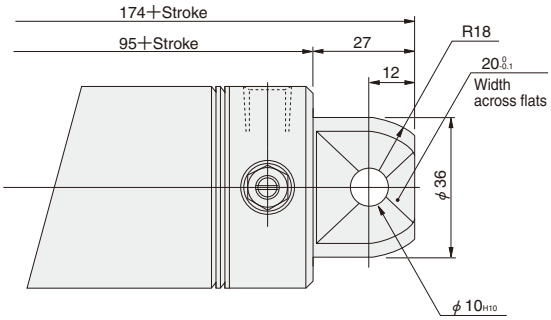

MADE TO ORDER PRODUCT

Cylinders with Scrapers

● For delivery, consult us.

Symbol

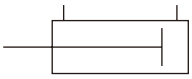

Specifications

Item / Bore size mm [in.]	20, 25, 32, 40 [0.787, 0.984, 1.260, 1.575]
Operation type	Double acting type
Media	Air
Mounting type	Basic type, Foot type, Flange type, Pivot type
Operating pressure range MPa [psi.]	0.1～0.9 [15～131]
Proof pressure MPa [psi.]	1.32 [191]
Operating temperature range °C [°F]	0～70 [32～158]
Operating speed range mm/s [in./sec.]	30～800 [1.2～31.5]
Cushion	Fixed type (Rubber bumper)
Lubrication	Not required
Port size Rc	1/8

Bore Size and Stroke

mm

Bore size	Standard strokes	Maximum stroke	Maximum available stroke
20	25 50 75 100 125 150	200	1050
25	25 50 75 100 125 150 200	250	
32	25 50 75 100 125 150 200	300	
40	25 50 75 100 125 150 200 250 300	400	

Remarks: 1. Stroke tolerance $^{+1}_{0}$ [$^{+0.039in.}_{0}$]
2. For non-standard strokes, consult us.
3. The minimum operating pressure when the stroke is over the maximum stroke at bore size of ϕ 20～ϕ 40 is 0.2MPa [29psi.].

Order Codes

DA **Y** **20×50** – □ – □ – □ – □ □ □

Bore size × Stroke

With scraper

Slim double acting cylinder

Head cover specification
Blank — Standard head
A —— Short head

Mounting type
Blank — Basic type
1 —— Foot mounting type
3 —— Flange mounting type
8E —— Pivot mounting type with supporting bracket (with pin)
● Mounting brackets are included at shipping.

Rod end accessory
Blank — No rod end accessory
I —— I type knuckle
Y —— Y type knuckle (with pin)
● Mounting brackets are included at shipping.
● For the cylinder joint and cylinder rod end, see p.1568.

Sensor switch (for cylinders with sensor switches)
Blank — No sensor switch

ZG530	2-lead wire Solid state type	with indicator lamp	DC10～28V
ZG553	3-lead wire Solid state type	with indicator lamp	DC4.5～28V
CS3M	Reed switch type	with indicator lamp	DC10～30V AC85～230V
CS4M	Reed switch type	with indicator lamp	DC10～30V AC85～115V
CS5M	Reed switch type	without indicator lamp	DC3～30V AC85～115V
CS2F	Reed switch type	with indicator lamp	AC85～230V
CS3F	Reed switch type	with indicator lamp	DC10～30V
CS4F	Reed switch type	with indicator lamp	DC10～30V
CS5F	Reed switch type	without indicator lamp	DC3～30V

● For details of sensor switches, see p.1544.
● **CS□F** comes with DIN connector. All others are grommet type.

Lead wire length
(Applies to all except **CS□F**)
A —— 1000mm [39in.]
B —— 3000mm [118in.]

Number of sensor switches
1 —— With 1 sensor switch
2 —— With 2 sensor switches
3 —— With 3 sensor switches
⋮ ⋮

Dimensions of Cylinder with Scraper Basic Type (mm)

● ϕ 20～ϕ 40 DAY Bore size × Stroke

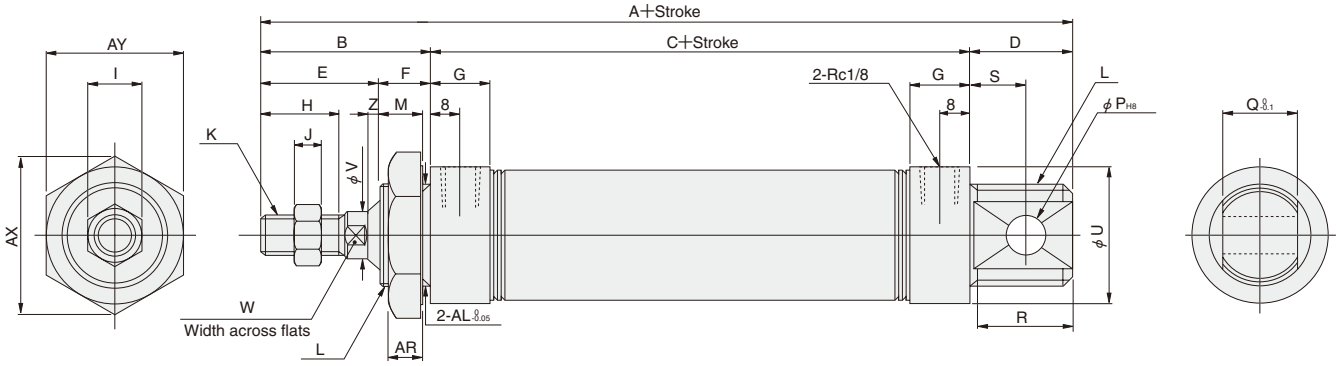

●Short head

DAY Bore size × Stroke -A

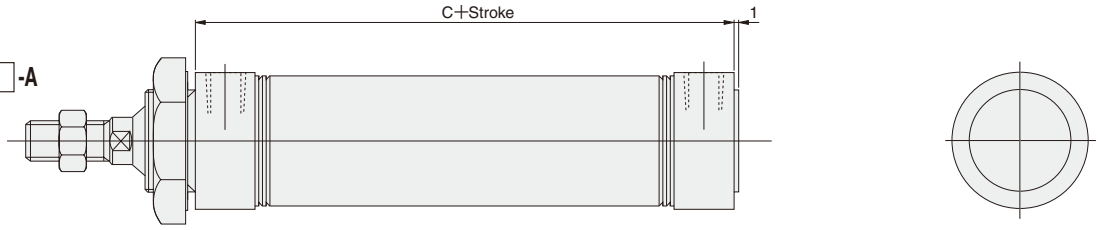

Bore mm [in.] \ Code	A	B	C	D	E	F	G	H	I	J	K	L	M	P	Q	R	S	U	V	W	Z
20 [0.787]	132	35	76	21	23	12	16	15	12	5	M8×1	M20×1.5	10	8	12	19	12	27	8	6	(2)
25 [0.984]	137	40	76	21	26	14	16	18	14	6	M10×1.25	M22×1.5	12	8	12	19	12	29	10	8	(2)
32 [1.260]	148	45	76	27	31	14	16	20	14	6	M10×1.25	M27×2	12	10	20	25	15	35	12	10	(3)
40 [1.575]	148	45	76	27	31	14	(14.5)	20	19	8	M14×1.5	M33×2	12	10	20	25	15	41.6	16	14	(3)

Bore mm [in.] \ Code	AR	AX	AY	AL
20 [0.787]	7.5	31.2	27	20
25 [0.984]	9.5	34.6	30	22
32 [1.260]	9.5	41.6	36	27
40 [1.575]	9.5	47.3	41	33

MADE TO ORDER PRODUCT

Block Heat Resistant Specification Cylinders

● For delivery, consult us.

Symbol

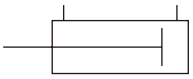

Specifications

Item / Bore size mm [in.]	16, 20, 25, 32, 40 [0.630, 0.787, 0.984, 1.260, 1.575]
Operation type	Double acting type
Media	Air
Mounting type	Side mount, Front mount
Operating pressure range MPa [psi.]	0.1～0.9 [15～131]
Proof pressure MPa [psi.]	1.32 [191]
Operating temperature range °C [°F]	0～130 [32～266]
Operating speed range mm/s [in./sec.]	100～700 [3.9～27.6]
Cushion	Fixed type (Rubber bumper)
Lubrication	Not required
Port size Rc	1/8

Bore Size and Stroke

mm

Bore size	Standard strokes	Maximum stroke	Maximum available stroke
16	15 25 50 75 100	100	300
20	25 50 75 100 125 150	150	500
25	25 50 75 100 125 150 200	200	
32	25 50 75 100 125 150 200	200	
40	25 50 75 100 125 150 200 250 300	300	

Remarks: 1. Stroke tolerance $^{+1}_{0}$ [$^{+0.039in.}_{0}$]
2. For non-standard strokes, consult us.
3. The minimum operating pressure when the stroke is over the maximum stroke at bore size of ϕ20～ϕ40 is 0.2MPa [29psi.].

Order Codes

DA B F 20×50 – □

- **DA**: **Slim double acting cylinder**
- **B**: **Block cylinder**
- **F**: **Heat resistant specification**
- **20×50**: **Bore size × Stroke**
- **□**: **Mounting type**
  - **2** ——— Side mount
  - **4** ——— Front mount

Major Parts and Materials

Parts / Bore size	16	20～40
Cylinder tube	Stainless steel	
Piston	Aluminum (anodized)	
Piston rod	Stainless steel (hard chrome plated)	Steel (hard chrome plated)
Rod cover	Aluminum (anodized)	
Head cover		
Seal	Fluoro rubber (FKM)	
Bumper		

Caution Since a magnet for sensor switch is not built into the heat resistant specification cylinder, sensor switches will not be functional.

Dimensions of Block Heat Resistant Specification Cylinder Side Mounting Type (mm)

● ϕ 16 DABF16 × Stroke -2

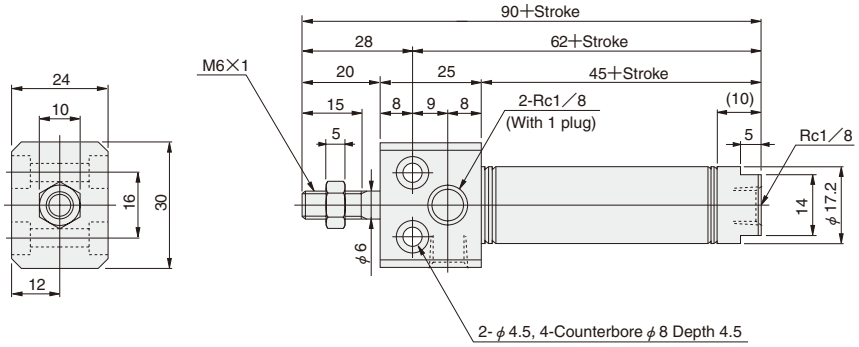

● ϕ 20～ϕ 40 DABF Bore size × Stroke -2

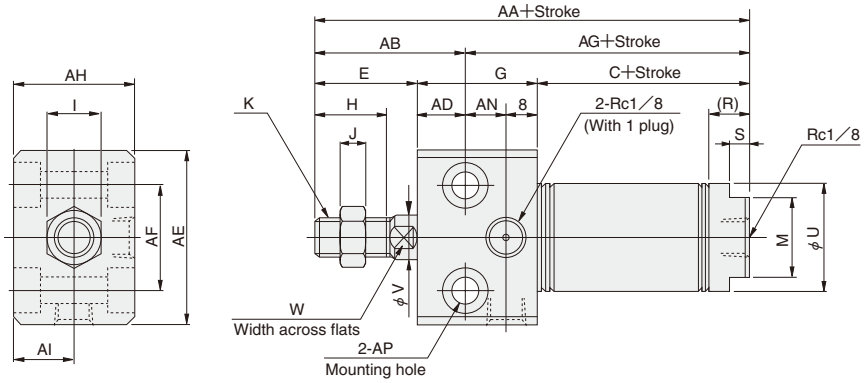

Bore mm [in.] \ Code	C	E	G	H	I	J	K	M	R	S	U	V	W	AA	AB	AD	AE	AF	AG	AH	AI	AN	AP
20 [0.787]	53	23	28	15	12	5	M8×1	17	10	5	21.4	ϕ8	6	104	34	11	38	22	70	28	14	9	ϕ6.6 2-Counterbore ϕ11 Depth6.5
25 [0.984]	53	26	30	18	14	6	M10×1.25	19	10	5	26.4	ϕ10	8	109	38	12	42	26	71	30	15	10	ϕ6.6 2-Counterbore ϕ11 Depth6.5
32 [1.260]	54	31	36	23	14	6	M10×1.25	22	11	6	33.6	ϕ12	10	121	45	14	54	34	76	36	18	14	ϕ9 2-Counterbore ϕ14 Depth8.6
40 [1.575]	60	31	44	23	19	8	M14×1.5	22	13	6	41.6	ϕ16	14	135	48	17	68	46	87	44	22	19	ϕ11 2-Counterbore ϕ17.5 Depth10.8

Dimensions of Block Heat Resistant Specification Cylinder Front Mounting Type (mm)

● ϕ 16 **DABF16** × Stroke **-4**

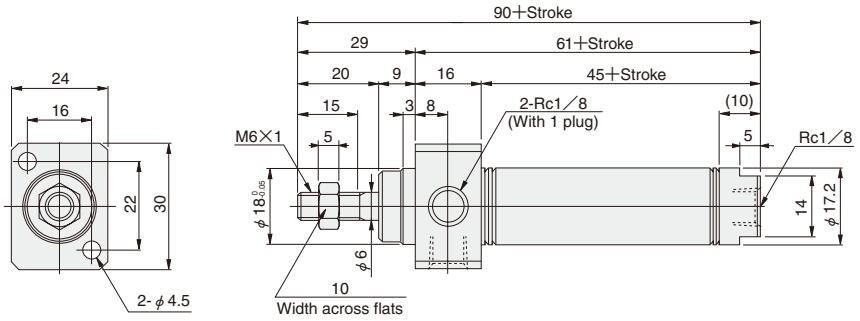

● ϕ 20～ϕ 40 **DABF** Bore size × Stroke **-4**

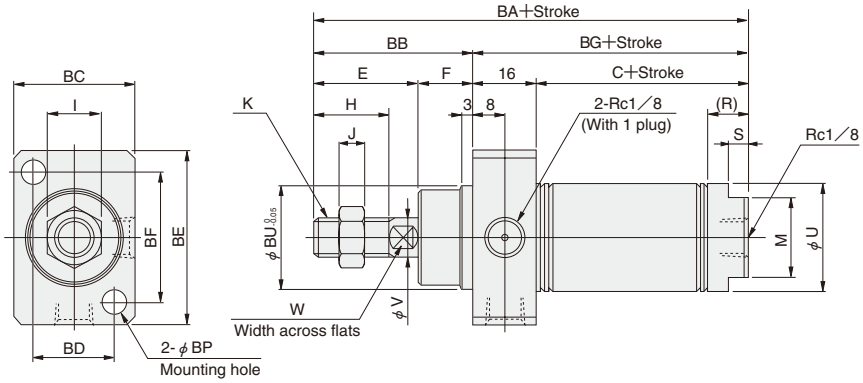

Bore mm [in.] \ Code	C	E	F	H	I	J	K	M	R	S	U	V	W	BA	BB	BC	BD	BE	BF	BG	BP	BU
20 [0.787]	53	23	12	15	12	5	M8×1	17	10	5	21.4	ϕ8	6	104	35	28	18	38	28	69	5.5	22
25 [0.984]	53	26	14	18	14	6	M10×1.25	19	10	5	26.4	ϕ10	8	109	40	30	20	42	32	69	5.5	24
32 [1.260]	54	31	14	23	14	6	M10×1.25	22	11	6	33.6	ϕ12	10	115	45	36	24	54	42	70	6.6	28
40 [1.575]	60	31	14	23	19	8	M14×1.5	22	13	6	41.6	ϕ16	14	121	45	44	28	68	52	76	9	34

MADE TO ORDER PRODUCT

Block Low Speed Cylinders

● For delivery, consult us.

Symbol

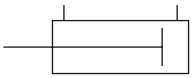

Specifications

Item / Bore size mm [in.]	20～40 [0.787～1.575]	50, 63 [1.969, 2.480]
Operation type	Double acting type	
Media	Air	
Mounting type	Side mount, Front mount	
Operating pressure range MPa [psi.]	0.06～0.9 [9～131]	0.05～0.7 [7～102]
Proof pressure MPa [psi.]	1.32 [191]	1.03 [149]
Operating temperature range °C [°F]	0～60 [32～140]	
Operating speed range[Note] mm/s [in./sec.]	10～500 [0.4～19.7]	10～300 [0.4～11.8]
Cushion	Fixed type (Rubber bumper)	Variable type (Stroke 15mm [0.59in.])
Lubrication	Not required	
Port size Rc	1/8	1/4

Note: When mounting and using sensor switches other than ZG530 and ZG553, maintain the minimum speed at 30mm/s [1.2in./sec.] or more.

Bore Size and Stroke

mm

Bore size	Standard strokes	Maximum stroke	Maximum available stroke
20	25 50 75 100 125 150	150	500
25	25 50 75 100 125 150 200	200	
32	25 50 75 100 125 150 200	200	
40	25 50 75 100 125 150 200 250 300	300	
50	25 50 75 100 150 200 250 300	300	
63	25 50 75 100 150 200 250 300	300	

Remarks: 1. Stroke tolerance $^{+1}_{0}$ [$^{+0.039in.}_{0}$]
2. For non-standard strokes, consult us.
3. The minimum operating pressure when the stroke is over the maximum stroke at bore size of ϕ20～ϕ40 is 0.2MPa [29psi.].

Order Codes

DA B N 50×100 – □ – □ – □□ □ □

Bore size × Stroke

Low speed cylinder

Block cylinder

Slim double acting cylinder

Mounting type
2 ——— Side mount
4 ——— Front mount

Rod end accessory
Blank — No rod end accessory
I ——— I type knuckle
Y ——— Y type knuckle (with pin)
● For the cylinder joint and cylinder rod end, see p.1568.

Sensor switch (for cylinders with sensor switches)

Blank	No sensor switch		
ZG530	2-lead wire Solid state type	with indicator lamp	DC10～28V
ZG553	3-lead wire Solid state type	with indicator lamp	DC4.5～28V
CS3M	Reed switch type	with indicator lamp	DC10～30V AC85～230V
CS4M	Reed switch type	with indicator lamp	DC10～30V AC85～115V
CS5M	Reed switch type	without indicator lamp	DC3～30V AC85～115V
CS2F	Reed switch type	with indicator lamp	AC85～230V
CS3F	Reed switch type	with indicator lamp	DC10～30V
CS4F	Reed switch type	with indicator lamp	DC10～30V
CS5F	Reed switch type	without indicator lamp	DC3～30V

● For details of sensor switches, see p.1544.
● **CS□F** comes with DIN connector. All others are grommet type.
Note: When mounting and using sensor switches other than ZG530 and ZG553, maintain the minimum speed at 30mm/s [1.2in./sec.] or more.

Lead wire length
(Applies to all except **CS□F**)
A ——— 1000mm [39in.]
B ——— 3000mm [118in.]

Number of sensor switches
1 ——— With 1 sensor switch
2 ——— With 2 sensor switches
3 ——— With 3 sensor switches
⋮ ⋮

Dimensions of Block Low Speed Cylinder Side Mounting Type (mm)

● φ 20～φ 40 DABN Bore size × Stroke -2

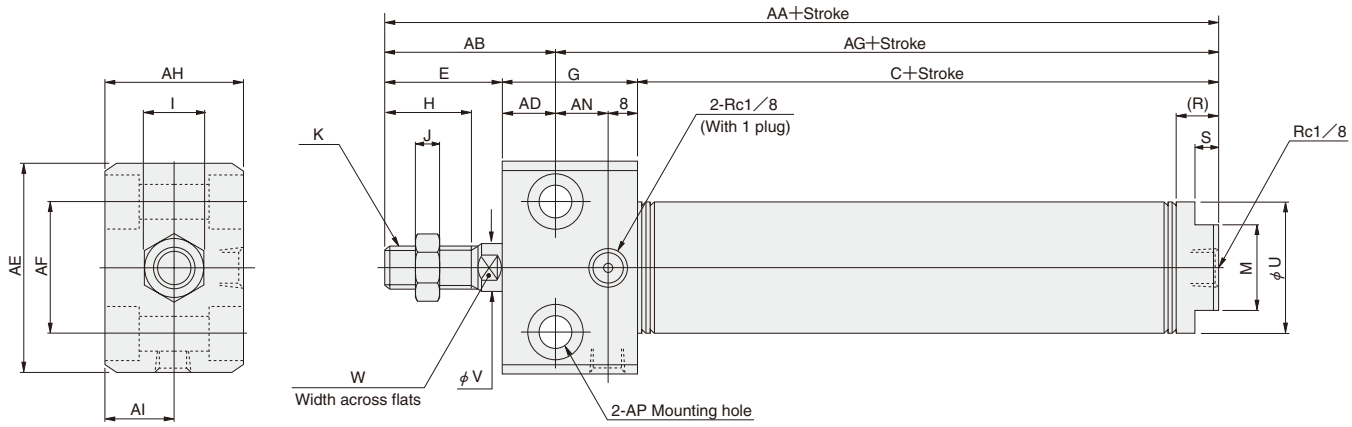

Bore mm [in.] \ Code	C	E	G	H	I	J	K	M	R	S	U	V	W
20 [0.787]	53	23	28	15	12	5	M8×1	17	10	5	21.4	8	6
25 [0.984]	53	26	30	18	14	6	M10×1.25	19	10	5	26.4	10	8
32 [1.260]	54	31	36	23	14	6	M10×1.25	22	11	6	33.6	12	10
40 [1.575]	60	31	44	23	19	8	M14×1.5	22	13	6	41.6	16	14

Bore mm [in.] \ Code	AA	AB	AD	AE	AF	AG	AH	AI	AN	AP
20 [0.787]	104	34	11	38	22	70	28	14	9	φ6.6 2-Counterbore φ11 Depth6.5
25 [0.984]	109	38	12	42	26	71	30	15	10	φ6.6 2-Counterbore φ11 Depth6.5
32 [1.260]	121	45	14	54	34	76	36	18	14	φ9 2-Counterbore φ14 Depth8.6
40 [1.575]	135	48	17	68	46	87	44	22	19	φ11 2-Counterbore φ17.5 Depth10.8

● φ 50, φ 63 DABN Bore size × Stroke -2

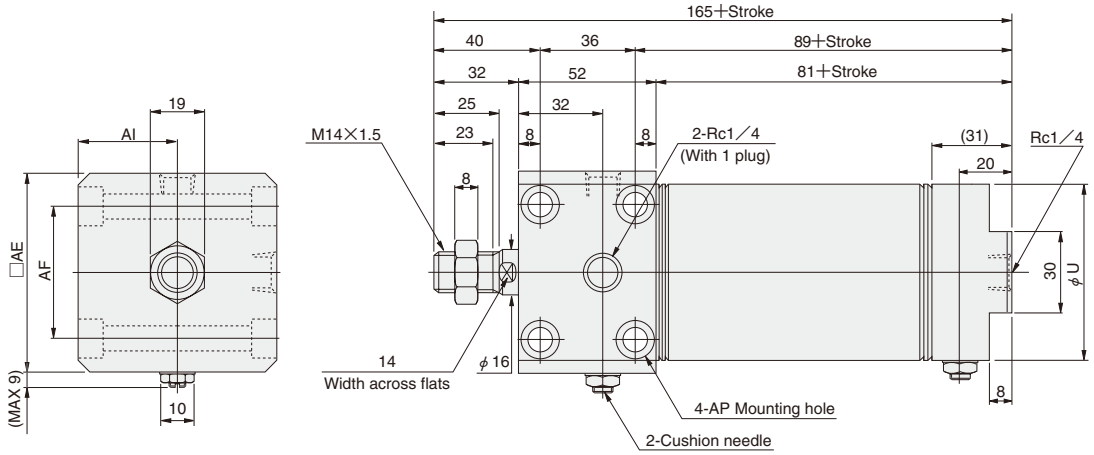

Bore mm [in.] \ Code	U	AE	AF	AI	AP
50 [1.969]	52	62	44	31	φ6.6 2-Counterbore φ11 Depth6.5
63 [2.480]	65.4	74	48	37	φ9 2-Counterbore φ14 Depth8.6

● φ 20～φ 40 DABN Bore size × Stroke -4

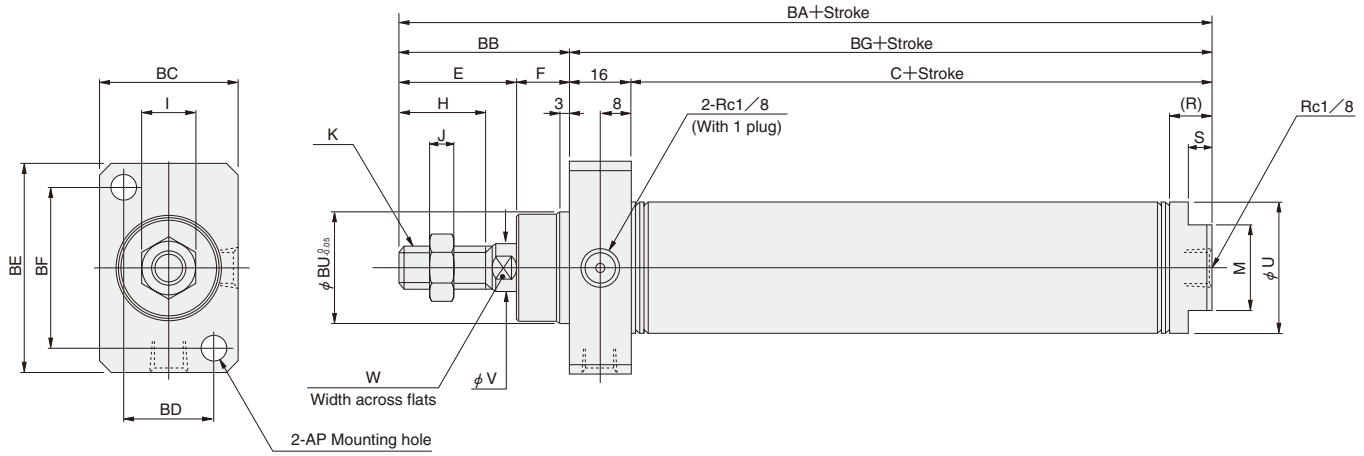

Bore mm [in.] \ Code	C	E	F	H	I	J	K	M	R	S	U	V	W
20 [0.787]	53	23	12	15	12	5	M8×1	17	10	5	21.4	8	6
25 [0.984]	53	26	14	18	14	6	M10×1.25	19	10	5	26.4	10	8
32 [1.260]	54	31	14	23	14	6	M10×1.25	22	11	6	33.6	12	10
40 [1.575]	60	31	14	23	19	8	M14×1.5	22	13	6	41.6	16	14

Bore mm [in.] \ Code	BA	BB	BC	BD	BE	BF	BG	BP	BU
20 [0.787]	104	35	28	18	38	28	69	5.5	22
25 [0.984]	109	40	30	20	42	32	69	5.5	24
32 [1.260]	115	45	36	24	54	42	70	6.6	28
40 [1.575]	121	45	44	28	68	52	76	9	34

● φ 50, φ 63 DABN Bore size × Stroke -4

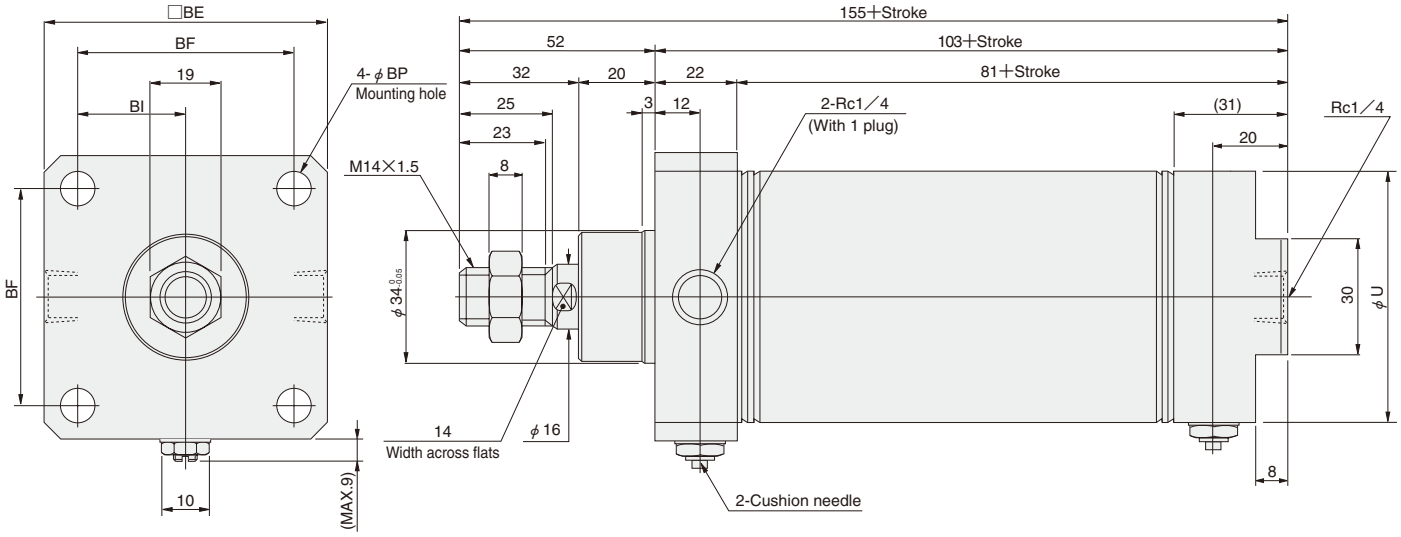

Bore mm [in.] \ Code	U	BE	BF	BI	BP
50 [1.969]	52	62	48	24	6.6
63 [2.480]	65.4	74	58	29	9

MADE TO ORDER PRODUCT

Cylinders with Wrench Flats

● For delivery, consult us.

Symbol

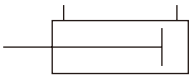

Specifications

Item / Bore size mm [in.]	20, 25, 32, 40 [0.787, 0.984, 1.260, 1.575]
Operation type	Double acting type
Media	Air
Mounting type	Basic type, Foot type, Flange type, Pivot type
Operating pressure range MPa [psi.]	0.04～0.9 [6～131]
Proof pressure MPa [psi.]	1.32 [191]
Operating temperature range °C [°F]	0～70 [32～158]
Operating speed range mm/s [in./sec.]	30～800 [1.2～31.5]
Cushion	Fixed type (Rubber bumper)
Lubrication	Not required
Port size Rc	1/8

Bore Size and Stroke

mm

Bore size	Standard strokes	Maximum stroke	Maximum available stroke
20	25 50 75 100 125 150	200	1050
25	25 50 75 100 125 150 200	250	
32	25 50 75 100 125 150 200	300	
40	25 50 75 100 125 150 200 250 300	400	

Remarks: 1. Stroke tolerance $^{+1}_{0}$ [$^{+0.039in.}_{0}$]
2. For non-standard strokes, consult us.
3. The minimum operating pressure when the stroke is over the maximum stroke at bore size of ϕ20～ϕ40 is 0.2MPa [29psi.].

Order Codes

DA | **20×50** | – □ – **H** – □ – □ – □ □ □

Slim double acting cylinder

Bore size × Stroke

Head cover specification
Blank — Standard head
A —— Short head

With wrench flats specification

Mounting type
Blank — Basic type
1 —— Foot mounting type
3 —— Flange mounting type
8E —— Pivot mounting type with supporting bracket (with pin)
● Mounting brackets are included at shipping.

Rod end accessory
Blank — No rod end accessory
I —— I type knuckle
Y —— Y type knuckle (with pin)
● Mounting brackets are included at shipping.
● For the cylinder joint and cylinder rod end, see p.1568.

Sensor switch (for cylinders with sensor switches)

Blank	No sensor switch		
ZG530	2-lead wire Solid state type	with indicator lamp	DC10～28V
ZG553	3-lead wire Solid state type	with indicator lamp	DC4.5～28V
CS3M	Reed switch type	with indicator lamp	DC10～30V AC85～230V
CS4M	Reed switch type	with indicator lamp	DC10～30V AC85～115V
CS5M	Reed switch type	without indicator lamp	DC3～30V AC85～115V
CS2F	Reed switch type	with indicator lamp	AC85～230V
CS3F	Reed switch type	with indicator lamp	DC10～30V
CS4F	Reed switch type	with indicator lamp	DC10～30V
CS5F	Reed switch type	without indicator lamp	DC3～30V

● For details of sensor switches, see p.1544.
● **CS□F** comes with DIN connector. All others are grommet type.

Lead wire length
(Applies to all except **CS□F**)
A —— 1000mm [39in.]
B —— 3000mm [118in.]

Number of sensor switches
1 —— With 1 sensor switch
2 —— With 2 sensor switches
3 —— With 3 sensor switches
⋮ ⋮

Dimensions of Cylinder with Wrench Flats Basic Type (mm)

( ) shows for ϕ 40.

● ϕ 20～ϕ 40 **DA** Bore size × Stroke **-H**

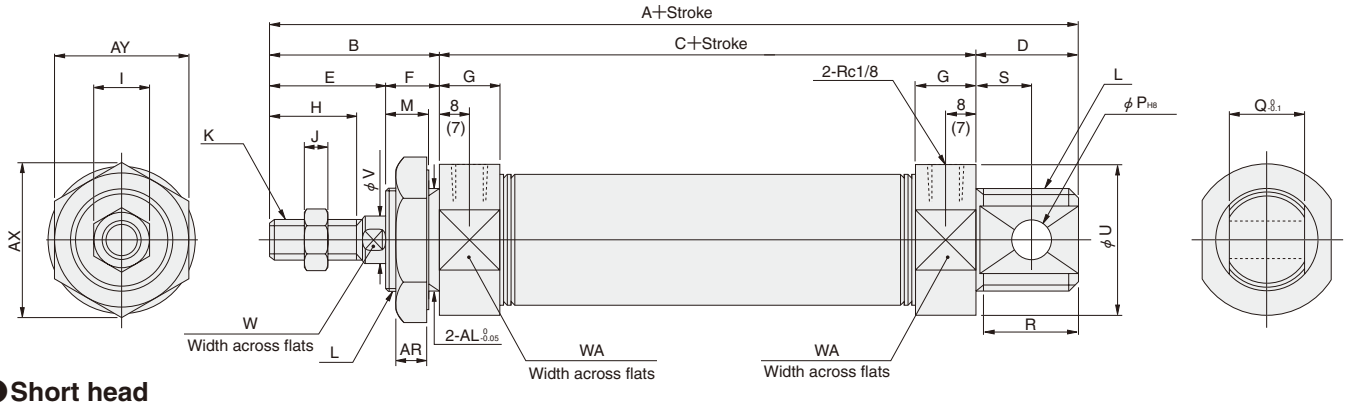

●**Short head**

DA Bore size × Stroke **-A-H**

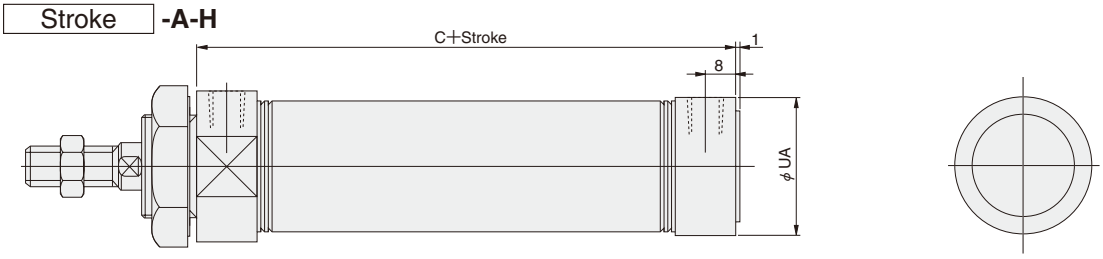

Code / Bore mm [in.]	A	B	C	D	E	F	G	H	I	J	K	L	M	P	Q	R	S	U	UA	V	W	WA
20 [0.787]	132	35	76	21	23	12	16	15	12	5	M8×1	M20×1.5	10	8	12	19	12	27	27	8	6	24
25 [0.984]	137	40	76	21	26	14	16	18	14	6	M10×1.25	M22×1.5	12	8	12	19	12	29	29	10	8	27
32 [1.260]	148	45	76	27	31	14	16	23	14	6	M10×1.25	M27×2	12	10	20	25	15	38	35	12	10	35
40 [1.575]	148	45	76	27	31	14	(14.5)	23	19	8	M14×1.5	M33×2	12	10	20	25	15	44.6	41.6	16	14	42

Code / Bore mm [in.]	AR	AX	AY	AL
20 [0.787]	7.5	31.2	27	20
25 [0.984]	9.5	34.6	30	22
32 [1.260]	9.5	41.6	36	27
40 [1.575]	9.5	47.3	41	33

MADE TO ORDER PRODUCT

All SUS Type Cylinders

● For delivery, consult us.

Symbol

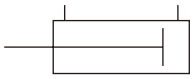

Specifications

Item / Bore size mm [in.]	20, 25, 32, 40 [0.787, 0.984, 1.260, 1.575]
Operation type	Double acting type
Media	Air
Mounting type	Basic type
Operating pressure range MPa [psi.]	0.04～0.9 [6～131]
Proof pressure MPa [psi.]	1.32 [191]
Operating temperature range °C [°F]	0～70 [32～158]
Operating speed range mm/s [in./sec.]	30～700 [1.2～27.6]
Cushion	Fixed type (Rubber bumper)
Lubrication	Not required
Port size Rc	1/8

Bore Size and Stroke

mm

Bore size	Standard strokes	Maximum stroke	Maximum available stroke
20	25 50 75 100 125 150	200	1050
25	25 50 75 100 125 150 200	250	
32	25 50 75 100 125 150 200	300	
40	25 50 75 100 125 150 200 250 300	400	

Remarks: 1. Stroke tolerance $^{+1}_{0}$ [$^{+0.039in.}_{0}$]
2. For non-standard strokes, consult us.
3. The minimum operating pressure when the stroke is over the maximum stroke at bore size of ϕ20～ϕ40 is 0.2MPa [29psi.].

Order Codes

SUS – **DA** **20×50** – □ – □ □ □

SUS specification

Slim double acting cylinder

Bore size × Stroke

Head cover specification
Blank — Standard head
A — Short head

Number of sensor switches
1 — With 1 sensor switch
2 — With 2 sensor switches
3 — With 3 sensor switches
⋮ ⋮

Lead wire length (Applies to all except **CS□F**)
A — 1000mm [39in.]
B — 3000mm [118in.]

Sensor switch (for cylinders with sensor switches)

Blank	No sensor switch		
ZG530	2-lead wire Solid state type	with indicator lamp	DC10～28V
ZG553	3-lead wire Solid state type	with indicator lamp	DC4.5～28V
CS3M	Reed switch type	with indicator lamp	DC10～30V AC85～230V
CS4M	Reed switch type	with indicator lamp	DC10～30V AC85～115V
CS5M	Reed switch type	without indicator lamp	DC3～30V AC85～115V
CS2F	Reed switch type	with indicator lamp	AC85～230V
CS3F	Reed switch type	with indicator lamp	DC10～30V
CS4F	Reed switch type	with indicator lamp	DC10～30V
CS5F	Reed switch type	without indicator lamp	DC3～30V

● For details of sensor switches, see p.1544.
● **CS□F** comes with DIN connector. All others are grommet type.

Inner Construction and Major Parts

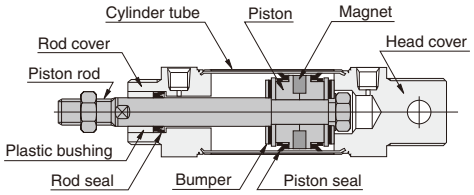

Major Parts and Materials

Parts \ Bore size	20～40
Cylinder tube	Stainless steel
Piston	Plastic
Piston rod	Stainless steel (hard chrome plated)
Rod cover	Stainless steel
Head cover	
Seal	Synthetic rubber (NBR)
Bumper	Synthetic rubber (NBR)
Magnet	Plastic magnet

Dimensions of All SUS Type Cylinder Basic Type (mm)

●Basic type SUS-DA Bore size × Stroke

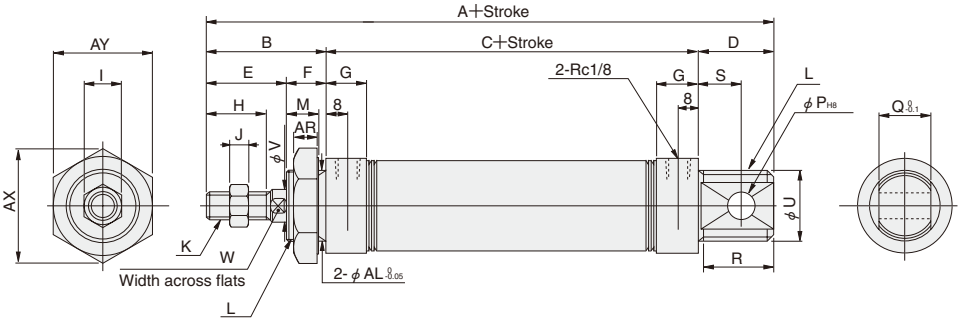

●Short head

SUS-DA Bore size × Stroke -A

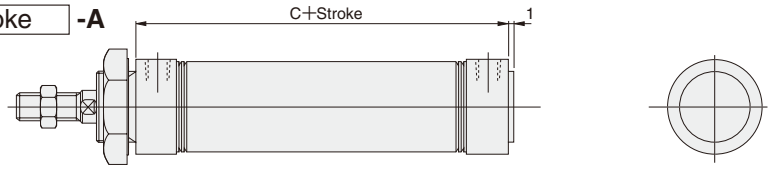

Bore mm [in.] \ Code	A	B	C	D	E	F	G	H	I	J	K	L	M	P	Q	R	S	U	V	W
20 [0.787]	132	35	76	21	23	12	16	15	12	5	M8×1	M20×1.5	10	8	12	19	12	27	8	6
25 [0.984]	137	40	76	21	26	14	16	18	14	6	M10×1.25	M22×1.5	12	8	12	19	12	29	10	8
32 [1.260]	148	45	76	27	31	14	16	23	14	6	M10×1.25	M27×2	12	10	20	25	15	35	12	10
40 [1.575]	148	45	76	27	31	14	(14.5)	23	19	8	M14×1.5	M33×2	12	10	20	25	15	41.6	16	14

Bore mm [in.] \ Code	AR	AX	AY	AL
20 [0.787]	7.5	31.2	27	20
25 [0.984]	9.5	34.6	30	22
32 [1.260]	9.5	41.6	36	27
40 [1.575]	9.5	47.3	41	33

MADE TO ORDER PRODUCT

Pivot Mounting Type Cylinders with Bushing

● For delivery, consult us.

Symbol

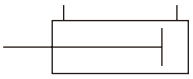

Specifications

Same as for standard items. See p.314.
Available at bore sizes ϕ20, ϕ25, ϕ32, and ϕ40 [ϕ0.787in., ϕ0.984in., ϕ1.260in., ϕ1.575in.] only.
However, bore sizes ϕ50 and ϕ63 [ϕ1.969in., ϕ2.480in.] are standard with bushing.

Bore Size and Stroke

Same as for standard items. See p.314.

Order Codes

DA | **20×50** | – **8B** – □ – □ – □□ □ □

Bore size × Stroke

Pivot mounting type with bushing

Slim double acting cylinder

Supporting bracket
Blank — Not required
8E — Pivot mounting type with supporting bracket (with pin)

Rod end accessory
Blank — No rod end accessory
I — I type knuckle
Y — Y type knuckle (with pin)
● For the cylinder joint and cylinder rod end, see p.1568.

Sensor switch (for cylinders with sensor switches)

Blank	No sensor switch		
ZG530	2-lead wire Solid state type	with indicator lamp	DC10～28V
ZG553	3-lead wire Solid state type	with indicator lamp	DC4.5～28V
CS3M	Reed switch type	with indicator lamp	DC10～30V AC85～230V
CS4M	Reed switch type	with indicator lamp	DC10～30V AC85～115V
CS5M	Reed switch type	without indicator lamp	DC3～30V AC85～115V
CS2F	Reed switch type	with indicator lamp	AC85～230V
CS3F	Reed switch type	with indicator lamp	DC10～30V
CS4F	Reed switch type	with indicator lamp	DC10～30V
CS5F	Reed switch type	without indicator lamp	DC3～30V

● For details of sensor switches, see p.1544.
● **CS□F** comes with DIN connector. All others are grommet type.

Lead wire length (Applies to all except **CS□F**)
A — 1000mm [39in.]
B — 3000mm [118in.]

Number of sensor switches
1 — With 1 sensor switch
2 — With 2 sensor switches
3 — With 3 sensor switches
⋮ ⋮

Dimensions of Pivot Mounting Type Cylinder with Bushing Basic Type

Other than the dimension and note shown below, all are the same as the standard items. See the basic type on p.316.

DA Bore size × Stroke **-8B**

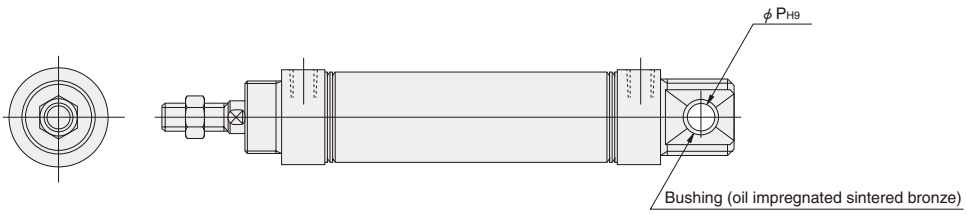

OPTIONAL ROD END SHAPE PATTERNS

Use an order form of rod end pattern and fill the items on the selected one from among 28 types of optional patterned shapes to obtain made-to-order cylinders of non-standard rod end shapes.
The shapes can be applied to the entire Slim cylinders series with the exception of square rod cylinders and cylinders with bellows. For the order form containing the optional patterned shapes, consult us.

Order Codes

D [ ] [ ] – [ ] – [ ] – W [ ]

- Cylinder type
- Bore size × Stroke
- Mounting type
- Sensor switch model and quantity
- Rod end shape pattern code

Piston Rod End Shape Pattern Diagram (28 Types)

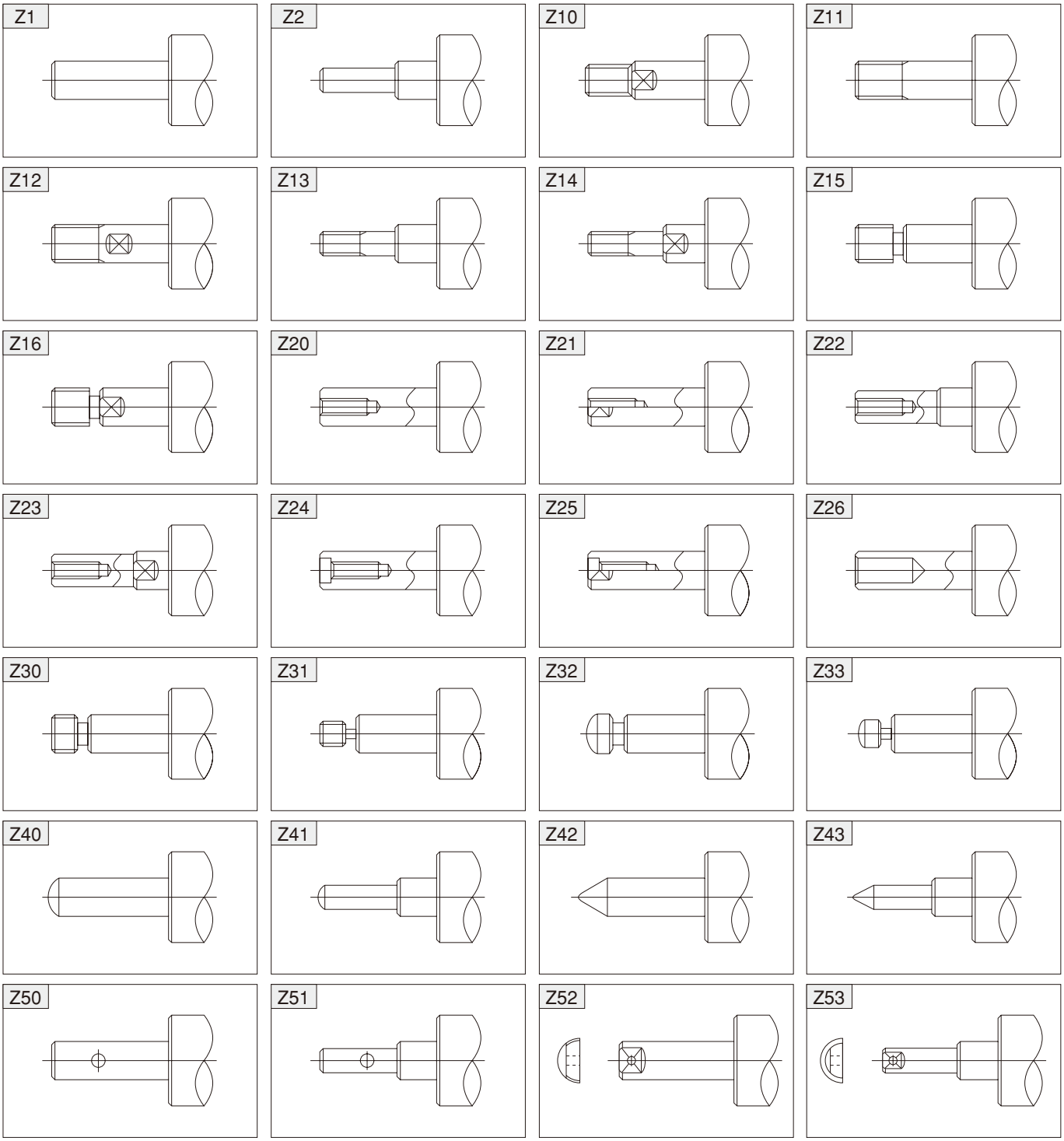

SENSOR SWITCHES

Solid State Type, Reed Switch Type

● **Since a magnet is already standard on the Slim cylinders series[Note], mounting a sensor switch will enable use in sensor switch applications.**

Note: Except the heat resistant specification cylinder.

Symbol

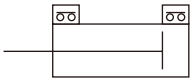

Order Codes

● Order codes for sensor switches mounted on the Slim cylinders

Order codes for Slim cylinder — □ □ □

Sensor switch

Lead wire length
(Applies to all except **CS**□**F**)
A ——— 1000mm [39in.]
B ——— 3000mm [118in.]

Number of sensor switches
1 ——— With 1 sensor switch
2 ——— With 2 sensor switches
3 ——— With 3 sensor switches
⋮ ⋮

Sensor switch

ZG530	Solid state type	For ϕ16～ϕ63	with indicator lamp	DC10～30V
ZG553	Solid state type	For ϕ16～ϕ63	with indicator lamp	DC4.5～28V
CS3M	Reed switch type	For ϕ16～ϕ63	with indicator lamp	DC10～30V AC85～230V
CS4M	Reed switch type	For ϕ16～ϕ63	with indicator lamp	DC10～30V AC85～115V
CS5M	Reed switch type	For ϕ16～ϕ63	without indicator lamp	DC3～30V AC85～115V
CS2F	Reed switch type	For ϕ20～ϕ63	with indicator lamp	AC85～230V
CS3F	Reed switch type	For ϕ20～ϕ63	with indicator lamp	DC10～30V
CS4F	Reed switch type	For ϕ20～ϕ63	with indicator lamp	DC10～30V
CS5F	Reed switch type	For ϕ20～ϕ63	without indicator lamp	DC3～30V

● Order codes for sensor switch only

Without mounting strap ····· □ □

With mounting strap ····· □ □ — □ □

Sensor switch

Lead wire length
(Applies to all except **CS**□**F**)
A ——— 1000mm [39in.]
B ——— 3000mm [118in.]

Bore size

Cylinder basic type
DA : Excluding **DAB** ϕ 16 and **DABK** ϕ 16
DAB : For block cylinder ϕ 16
DABK : For end keep cylinder ϕ 16
S : For sensor switch model **CS**□**F**

● Order codes for mounting strap only

□ — □ □

Sensor Switch type
G5 : Solid state type
For **ZG5**□□
Reed switch type
For **CS**□**M**
F : Reed switch type
For **CS**□**F**

Cylinder basic type
DA : Excluding **DAB** ϕ 16 and **DABK** ϕ 16
DAB : For block cylinder ϕ 16
DABK : For end keep cylinder ϕ 16
S : For sensor model **CS**□**F**

Bore size
16 : For ϕ 16 [0.630in.] Note
20 : For ϕ 20 [0.787in.]
25 : For ϕ 25 [0.984in.]
32 : For ϕ 32 [1.260in.]
40 : For ϕ 40 [1.575in.]
50 : For ϕ 50 [1.969in.]
63 : For ϕ 63 [2.480in.]
Note: Not available for **CS**□**F**

Minimum Cylinder Strokes When Using Sensor Switches

mm

Sensor switch model	Bore size	2 pcs. mounting		1 pc. mounting
		Along a straight line	In staggered positions	
ZG530 ZG553	**16**	20	10	10
	20～63	20	10	10
CS□M	**16～63**	20	15	15
CS□F	**20～63**	40	21	15

●Two pieces mounting ●One piece mounting

●When mounted in-line

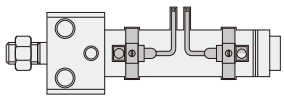

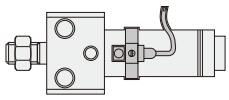

●When mounted in staggered positions

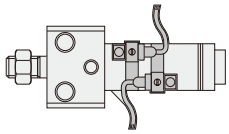

Sensor Switch Operating Range, Response Differential, and Maximum Sensing Location

● Operating range : ℓ
The distance the piston travels in one direction, while the switch is in the ON position.

● Response differential : C
The distance between the point where the piston turns the switch ON and the point where the switch is turned OFF as the piston travels in the opposite direction.

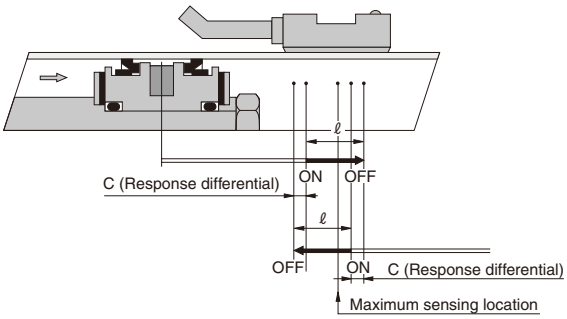

mm [in.]

Item	Bore size	16 [0.630]	20 [0.787]	25 [0.984]	32 [1.260]	40 [1.575]	50 [1.969]	63 [2.480]
Operating range : ℓ	**ZG530□**	2.5～4.1 [0.098～0.161]	2.5～4.2 [0.098～0.165]	2.6～4.3 [0.102～0.169]	3.0～4.8 [0.118～0.189]	3.1～5.0 [0.122～0.197]	3.3～5.4 [0.130～0.213]	3.5～5.7 [0.138～0.224]
	ZG533□							
	CS□M	6.7～7 [0.264～0.276]	7～8.5 [0.276～0.335]	7～8.5 [0.276～0.335]	8～9 [0.315～0.354]	9～10.5 [0.354～0.413]	7～8 [0.276～0.315]	8～9.5 [0.315～0.374]
	CS□F	—	7～8.5 [0.276～0.335]	8.5～10 [0.335～0.394]	9～10.5 [0.354～0.413]	10.5～12 [0.413～0.472]	9～10 [0.354～0.394]	9～10.5 [0.354～0.413]
Response differential : C	**ZG530**	0.7 [0.028] or less	0.7 [0.028] or less	0.8 [0.031] or less	0.7 [0.028] or less	0.8 [0.031] or less	0.8 [0.031] or less	0.8 [0.031] or less
	ZG533	0.7 [0.028] or less	0.7 [0.028] or less	0.8 [0.031] or less	0.7 [0.028] or less	0.8 [0.031] or less	0.8 [0.031] or less	0.8 [0.031] or less
	CS□M	1 [0.039] or less	1 [0.039] or less	1 [0.039] or less	1 [0.039] or less	1 [0.039] or less	1.2 [0.047] or less	1.2 [0.047] or less
	CS□F	—	1.5 [0.059] or less	1.5 [0.059] or less	1.5 [0.059] or less	1.5 [0.059] or less	2 [0.079] or less	1.5 [0.059] or less
Maximum sensing location	**ZG530, ZG553** Note 1	11 [0.433]	11 [0.433]	11 [0.433]	11 [0.433]	11 [0.433]	11 [0.433]	11 [0.433]
	CS□M Note 1	11 [0.433]	11 [0.433]	11 [0.433]	11 [0.433]	11 [0.433]	11 [0.433]	11 [0.433]
	CS□F Note 2	—	16 [0.630]	16 [0.630]	16 [0.630]	16 [0.630]	16 [0.630]	16 [0.630]

Remark: Figures in the table above are reference values.
Notes: 1. Figures are lengths measured from the switch's opposite end side to the lead wire.
2. Figures are lengths measured from the connector side's end surface to the lead wire.

Mounting Location of End of Stroke Detection Sensor Switch

When the sensor switch is mounted in the location shown in the diagram (figures in the table are reference values), the magnet comes to the sensor switch's maximum sensing location at the end of the stroke.

●Air cylinder, Low hydraulic cylinder, Valpack cylinder

●Air cylinder, Low hydraulic cylinder ●Valpack cylinder

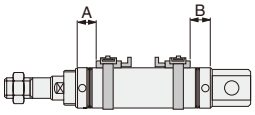

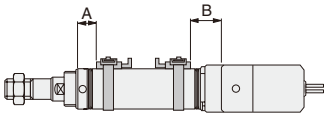

mm [in.]

Sensor switch model	Code \ Bore size	Air cylinder, Low hydraulic cylinder						Valpack cylinder			
		20	25	32	40	50	63	20	25	32	40
ZG530□ ZG553□	A	27 [1.063]	27 [1.063]	27 [1.063]	27 [1.063]	36 [1.417]	36 [1.417]	27 [1.063]	27 [1.063]	27 [1.063]	27 [1.063]
	B	27 [1.063]	27 [1.063]	27 [1.063]	27 [1.063]	36 [1.417]	36 [1.417]	39 [1.535]	39 [1.535]	39 [1.535]	44 [1.732]
CS□M	A	27 [1.063]	27 [1.063]	27 [1.063]	27 [1.063]	36 [1.417]	36 [1.417]	27 [1.063]	27 [1.063]	27 [1.063]	27 [1.063]
	B	27 [1.063]	27 [1.063]	27 [1.063]	27 [1.063]	36 [1.417]	36 [1.417]	39 [1.535]	39 [1.535]	39 [1.535]	44 [1.732]
CS□F	A	22 [0.866]	22 [0.866]	22 [0.866]	22 [0.866]	32 [1.260]	32 [1.260]	22 [0.866]	22 [0.866]	22 [0.866]	22 [0.866]
	B	22 [0.866]	22 [0.866]	22 [0.866]	22 [0.866]	32 [1.260]	32 [1.260]	34 [1.339]	34 [1.339]	34 [1.339]	39 [1.535]

●Single acting cylinder

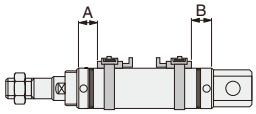

mm [in.]

Sensor switch model	Code	Stroke \ Bore size	20 [0.787]	25 [0.984]	32 [1.260]	40 [1.575]
ZG530□ ZG553□ CS□M	A	0～25	35 [1.378]	36 [1.417]	35 [1.378]	37 [1.457]
		26～50	52 [2.047]	49 [1.929]	49 [1.929]	53 [2.087]
		51～75	72 [2.835]	71 [2.795]	72 [2.835]	68 [2.677]
		76～100	—	84 [3.307]	86 [3.386]	95 [3.740]
		101～125	—	—	—	110 [4.331]
		126～150	—	—	—	125 [4.921]
	B	—	27 [1.063]	27 [1.063]	27 [1.063]	27 [1.063]
CS□F	A	0～25	30 [1.181]	31 [1.220]	30 [1.181]	32 [1.260]
		26～50	47 [1.850]	44 [1.732]	44 [1.732]	48 [1.890]
		51～75	67 [2.638]	66 [2.598]	67 [2.638]	63 [2.480]
		76～100	—	79 [3.110]	81 [3.189]	90 [3.543]
		101～125	—	—	—	105 [4.134]
		126～150	—	—	—	120 [4.724]
	B	—	22 [0.866]	22 [0.866]	22 [0.866]	22 [0.866]

●Push side stroke adjusting cylinder

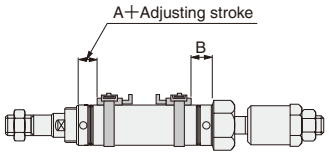

mm [in.]

Sensor switch model	Code \ Bore size	20 [0.787]	25 [0.984]	32 [1.260]	40 [1.575]
ZG530□ ZG553□ CS□M	A	27 [1.063]	27 [1.063]	27 [1.063]	27 [1.063]
	B	27 [1.063]	27 [1.063]	27 [1.063]	27 [1.063]
CS□F	A	22 [0.866]	22 [0.866]	22 [0.866]	22 [0.866]
	B	22 [0.866]	22 [0.866]	22 [0.866]	22 [0.866]

●Pull side stroke adjusting cylinder

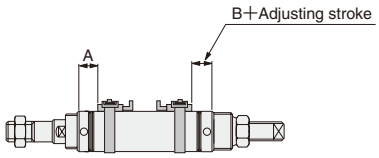

mm [in.]

Sensor switch model	Code \ Bore size	20 [0.787]	25 [0.984]	32 [1.260]	40 [1.575]
ZG530□ ZG553□ CS□M	A	27 [1.063]	27 [1.063]	27 [1.063]	27 [1.063]
	B	37 [1.457]	37 [1.457]	42 [1.654]	42 [1.654]
CS□F	A	22 [0.866]	22 [0.866]	22 [0.866]	22 [0.866]
	B	32 [1.260]	32 [1.260]	37 [1.457]	37 [1.457]

●Block cylinder

●Side mount

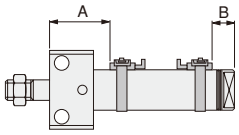

●Front mount

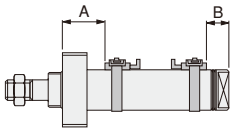

mm [in.]

Mounting type		Side mount							Front mount						
Bore size		16	20	25	32	40	50	63	16	20	25	32	40	50	63
ZG530□ ZG553□	A Rod side	32 [1.260]	39 [1.535]	41 [1.614]	47 [1.850]	57 [2.244]	67 [2.638]	67 [2.638]	23 [0.906]	27 [1.063]	27 [1.063]	27 [1.063]	29 [1.142]	37 [1.457]	37 [1.457]
	B Rod side	16 [0.630]	20 [0.787]	20 [0.787]	21 [0.827]	25 [0.984]	45 [1.772]	45 [1.772]	16 [0.630]	20 [0.787]	20 [0.787]	21 [0.827]	25 [0.984]	45 [1.772]	45 [1.772]
CS□M	A Rod side	32 [1.260]	39 [1.535]	41 [1.614]	47 [1.850]	57 [2.244]	66 [2.598]	66 [2.598]	23 [0.906]	27 [1.063]	27 [1.063]	27 [1.063]	29 [1.142]	36 [1.417]	36 [1.417]
	B Rod side	16 [0.630]	20 [0.787]	20 [0.787]	21 [0.827]	25 [0.984]	44 [1.732]	44 [1.732]	16 [0.630]	20 [0.787]	20 [0.787]	21 [0.827]	25 [0.984]	44 [1.732]	44 [1.732]
CS□F	A Rod side	—	36 [1.417]	38 [1.496]	44 [1.732]	52 [2.047]	64 [2.520]	64 [2.520]	—	24 [0.945]	24 [0.945]	24 [0.945]	24 [0.945]	34 [1.339]	34 [1.339]
	B Rod side	—	17 [0.669]	17 [0.669]	18 [0.709]	20 [0.787]	42 [1.654]	42 [1.654]	—	17 [0.669]	17 [0.669]	18 [0.709]	22 [0.866]	42 [1.654]	42 [1.654]

Moving Sensor Switch

●ZG530□ ZG553□ CS□M

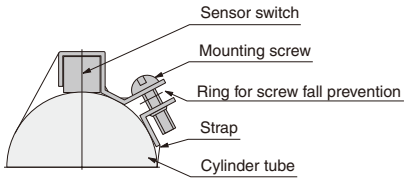

- Loosening the mounting screw allows the sensor switch to be moved freely along with the strap in the axial and circumferential direction. The sensor switch alone cannot be moved.
- To remove the sensor switch from the strap, first detach the strap from the cylinder tube and then remove the sensor switch from the strap.
- Tighten the mounting screw with a tightening torque of 49N·cm [4.3in·lbf].

●CS□F

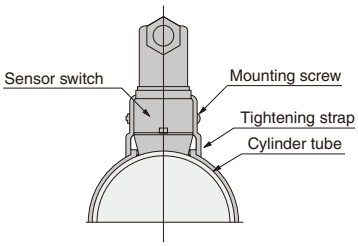

- Loosening the mounting screw allows the sensor switch to be moved freely in the axial and circumferential direction.
- Slightly loosening the mounting screw allows fine adjustment of the lead switch only, up to 5mm [0.2in.] in the axial direction.
  Tighten the mounting screw with a tightening torque of 68.6N·cm [6.1in·lbf].

Dimensions of Sensor Switch (mm)

●ZG530□ ZG553□ CS□M

ϕ 16

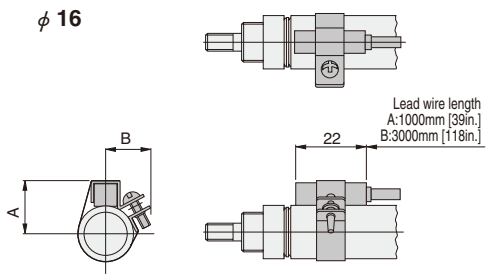

ϕ 20～ϕ 63

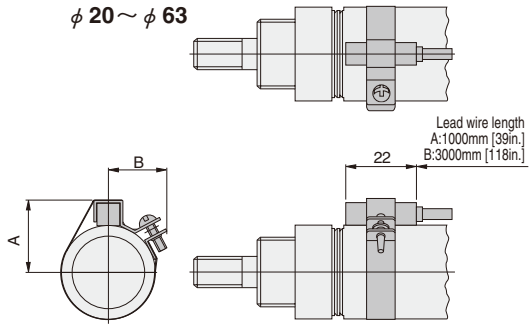

mm [in.]

Bore \ Code	A	B
16 [0.630]	16 [0.630]	15 [0.591]
20 [0.787]	19 [0.748]	17 [0.669]
25 [0.984]	20.5 [0.807]	17.5 [0.689]
32 [1.260]	25 [0.984]	19 [0.748]
40 [1.575]	29 [1.142]	—※
50 [1.969]	34 [1.339]	—※
63 [2.480]	41 [1.614]	—※

※ At ϕ 40 or larger, dimension B is the radius of the cylinder tube. Therefore, the protrusion in the B direction of the mounting section disappears.

●CS□F

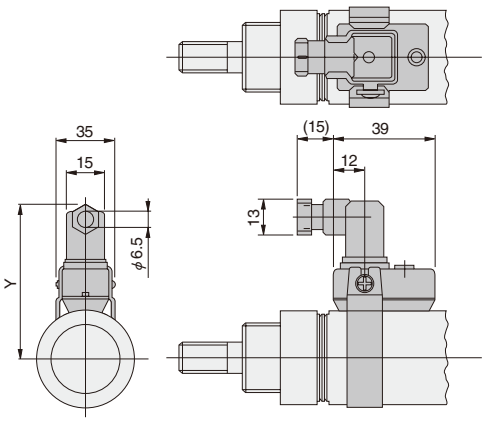

mm [in.]

Bore \ Code	Y
20 [0.787]	59 [2.323]
25 [0.984]	61.5 [2.421]
32 [1.260]	65 [2.559]
40 [1.575]	69 [2.717]
50 [1.969]	76 [2.992]
63 [2.480]	83 [3.268]

Dimensions

● φ 16

●Y type

SLIM-Y

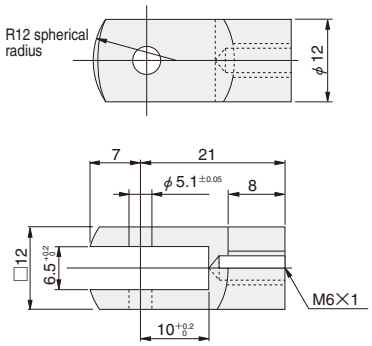

Pin for Y type knuckle

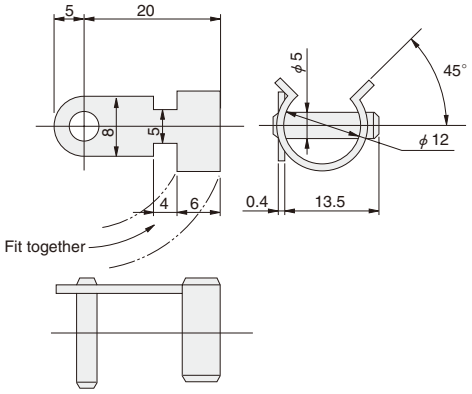

●I type

SLIM-I

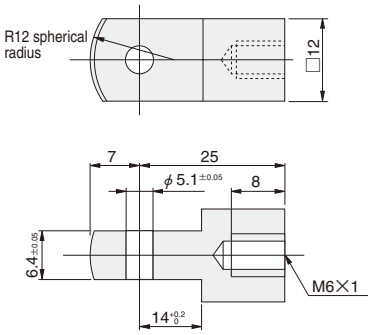

● φ 20～φ 63

●Y type

SLIM-Y

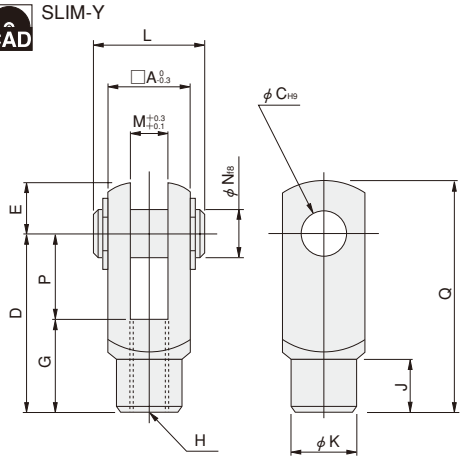

●I type

SLIM-I

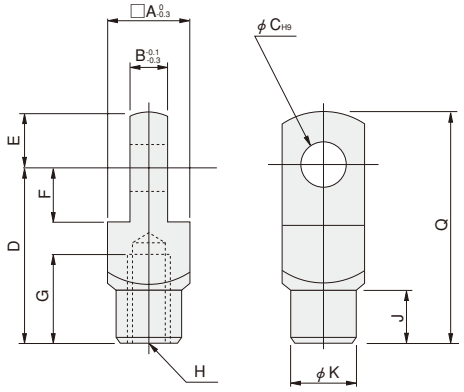

mm [in.]

Bore \ Code	A	B	C	D	E	F	G	H	J	K	L	M	N	P	Q
20 [0.787], 25 [0.984]※	16	8	8	30	10	11	15	M8×1	10	14	21	8	8	15	40
25 [0.984], 32 [1.260]	19	10	10	40	12	13	20	M10×1.25	12	16	25	10	10	20	52
40 [1.575], 50 [1.969], 63 [2.480]	24	14	10	45	12	13	25	M14×1.5	15	22	30	14	10	20	57

Note: Items marked with ※ are for the square rod cylinders.

Dimensions (For brake cylinders with bellows, see p.367.)

SLIM-J

● ϕ 20～ϕ 40

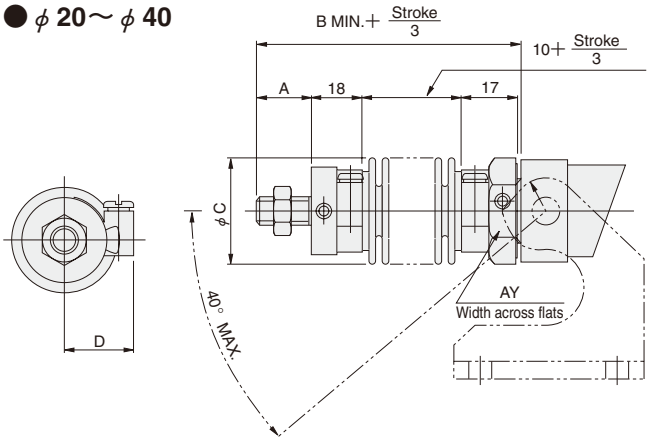

mm [in.]

Bore \ Code	A	B	C	D	AY
20 [0.787]	15 [0.591]	63 [2.480]	35 [1.378]	23 [0.906]	27 [1.063]
25 [0.984]	18 [0.709]	66 [2.598]	35 [1.378]	23 [0.906]	30 [1.181]
32 [1.260]	23 [0.906]	71 [2.795]	40 [1.575]	26 [1.024]	36 [1.417]
40 [1.575]	23 [0.906]	71 [2.795]	48 [1.890]	29 [1.142]	41 [1.614]

Note: Supporting brackets for the rod trunnion type with bellows should be mounted in the direction opposite to the case of no bellows shown in the diagram.

● ϕ 50, ϕ 63

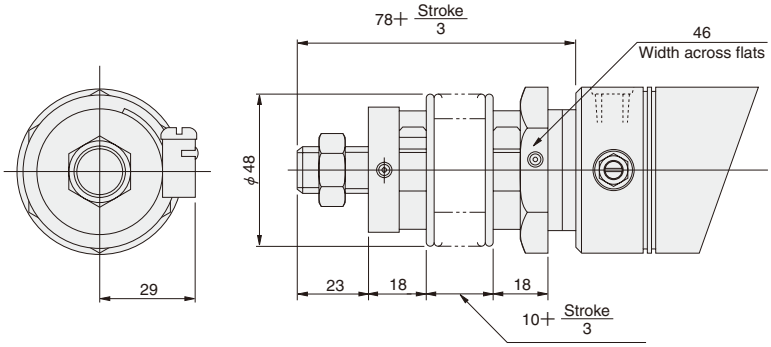

Mass of Slim Cylinder with Bellows

kg [lb.]

Bore size mm [in.]	Zero stroke mass				Additional mass for each 1mm [0.0394in.] stroke
	Standard head	Short head	Pivot mounting type	Trunnion type	
20 [0.787]	0.25 [0.55] (0.23 [0.51])	0.24 [0.53] (0.22 [0.49])	—	0.44 [0.97]	0.0009 [0.0020]
25 [0.984]	0.29 [0.64] (0.27 [0.60])	0.28 [0.62] (0.26 [0.57])	—	0.47 [1.04]	0.0013 [0.0029]
32 [1.260]	0.43 [0.95] (0.40 [0.88])	0.41 [0.90] (0.38 [0.84])	—	0.60 [1.32]	0.0018 [0.0040]
40 [1.575]	0.62 [1.37] (0.56 [1.23])	0.58 [1.28] (0.52 [1.15])	—	0.78 [1.72]	0.0029 [0.0064]
50 [1.969]	1.03 [2.27]	0.98 [2.16]	0.95 [2.09]	—	0.0033 [0.0073]
63 [2.480]	1.36 [3.00]	1.32 [2.91]	1.29 [2.84]	—	0.0038 [0.0084]

Note: Figures in parentheses ( ) are for the cylinder with variable cushion.

Order Codes for Mounting Bracket

(1) Foot mounting bracket

1 – [ ] [ ]

Foot mounting bracket

Cylinder type
DA: Applies to all except **DV**
DV: Valpack cylinder
(Not available at ϕ 50 and ϕ 63)

Bore size
20 : ϕ 20 [0.787in.]
25 : ϕ 25 [0.984in.]
32 : ϕ 32 [1.260in.]
40 : ϕ 40 [1.575in.]
50 : ϕ 50 [1.969in.]
63 : ϕ 63 [2.480in.]

(2) Flange mounting bracket

3 – **DA** [ ]

Flange mounting bracket

Slim cylinder

Bore size
20 : ϕ 20 [0.787in.]
25 : ϕ 25 [0.984in.]
32 : ϕ 32 [1.260in.]
40 : ϕ 40 [1.575in.]
50 : ϕ 50 [1.969in.]
63 : ϕ 63 [2.480in.]

(3) Pivot mounting type supporting bracket

8E – **DA** [ ]

Pivot mounting type supporting bracket

Slim cylinder

Bore size
20 : ϕ 20 [0.787in.]
25 : ϕ 25 [0.984in.]
32 : ϕ 32 [1.260in.]
40 : ϕ 40 [1.575in.]
50 : ϕ 50 [1.969in.]
63 : ϕ 63 [2.480in.]

(4) Head trunnion bracket

11T – [ ] [ ]

Head trunnion bracket

Cylinder type
DA: Applies to all except **DV**
DV: Valpack cylinder

Bore size
20 : ϕ 20 [0.787in.]
25 : ϕ 25 [0.984in.]
32 : ϕ 32 [1.260in.]
40 : ϕ 40 [1.575in.]
50 : ϕ 50 [1.969in.]
63 : ϕ 63 [2.480in.]

(5) Rod trunnion bracket

12T – [ ] [ ]

Rod trunnion bracket

Cylinder type
DA: Applies to all except **DV**
DV: Valpack cylinder

Bore size
20 : ϕ 20 [0.787in.]
25 : ϕ 25 [0.984in.]
32 : ϕ 32 [1.260in.]
40 : ϕ 40 [1.575in.]
50 : ϕ 50 [1.969in.]
63 : ϕ 63 [2.480in.]

(6) Y type knuckle

Y – [ ] [ ]

Y type knuckle

Slim Cylinder
DA: Applies to all except ϕ 16
DAB: Available at ϕ 16 only

Bore size
16 : ϕ 16 [0.630in.]
20 : ϕ 20 [0.787in.]
25 : ϕ 25 [0.984in.]
32 : ϕ 32 [1.260in.]
40 : ϕ 40 [1.575in.]
50 : ϕ 50 [1.969in.]
63 : ϕ 63 [2.480in.]

(7) I type knuckle

I – [ ] [ ]

I type knuckle

Cylinder type
DA: Applies to all except ϕ 16
DAB: Available at ϕ 16 only

Bore size
16 : ϕ 16 [0.630in.]
20 : ϕ 20 [0.787in.]
25 : ϕ 25 [0.984in.]
32 : ϕ 32 [1.260in.]
40 : ϕ 40 [1.575in.]
50 : ϕ 50 [1.969in.]
63 : ϕ 63 [2.480in.]