Risbe so last družbe Hidria-Rotomatika d.o.o. in predstavljajo poslovno skrivnost in so avtorsko delo.
Vse pravice iz patentov, blagovnih znamk in modelov povezanih z risbami pripadajo družbi Hidria Rotomatika d.o.o.
Vsak prenos tretjim osebam brez pisnega dovoljenja družbe Hidria Rotomatika d.o.o. je strogo prepovedan.

All drawings, regardless of form, are owned by Hidria Rotomatika d.o.o. and are strictly confidential and present copyrights, Intellectual Property Rights as follows rights under the laws of patents, petty patents, design patents and registered designs, copyrights, trade secret rights, and similar exclusive rights in industrial property connected with the drawings are reserved by Hidria Rotomatika d.o.o. Disclosure to any third paitry is strictly forbidden.

ZAUPNO / CONFIDENTIAL

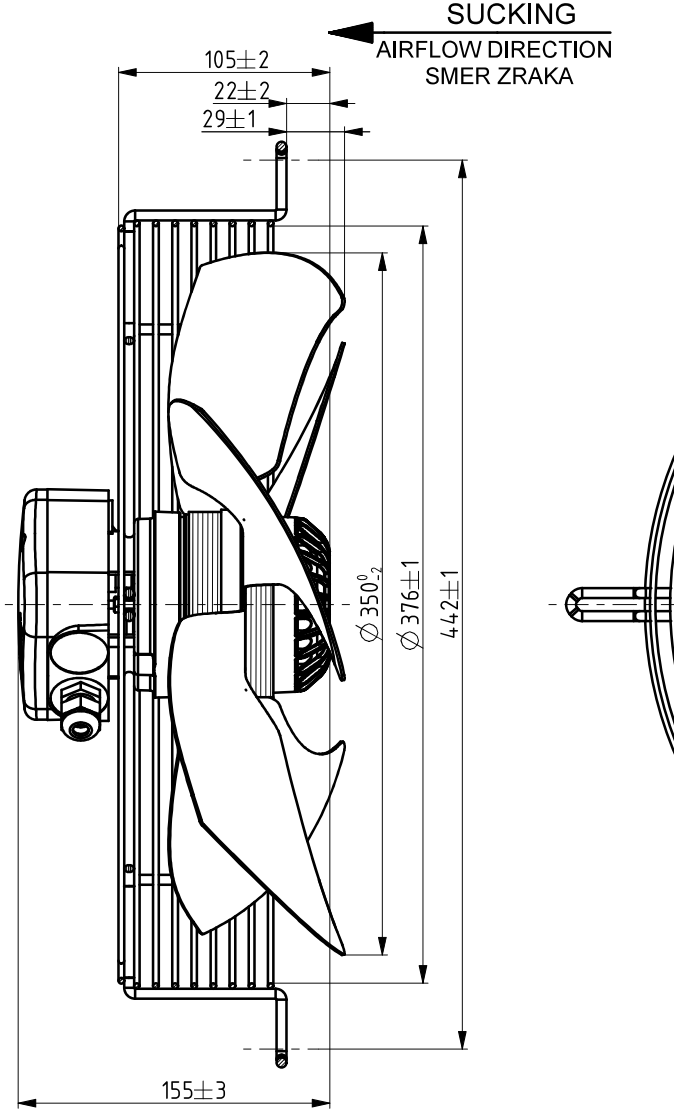

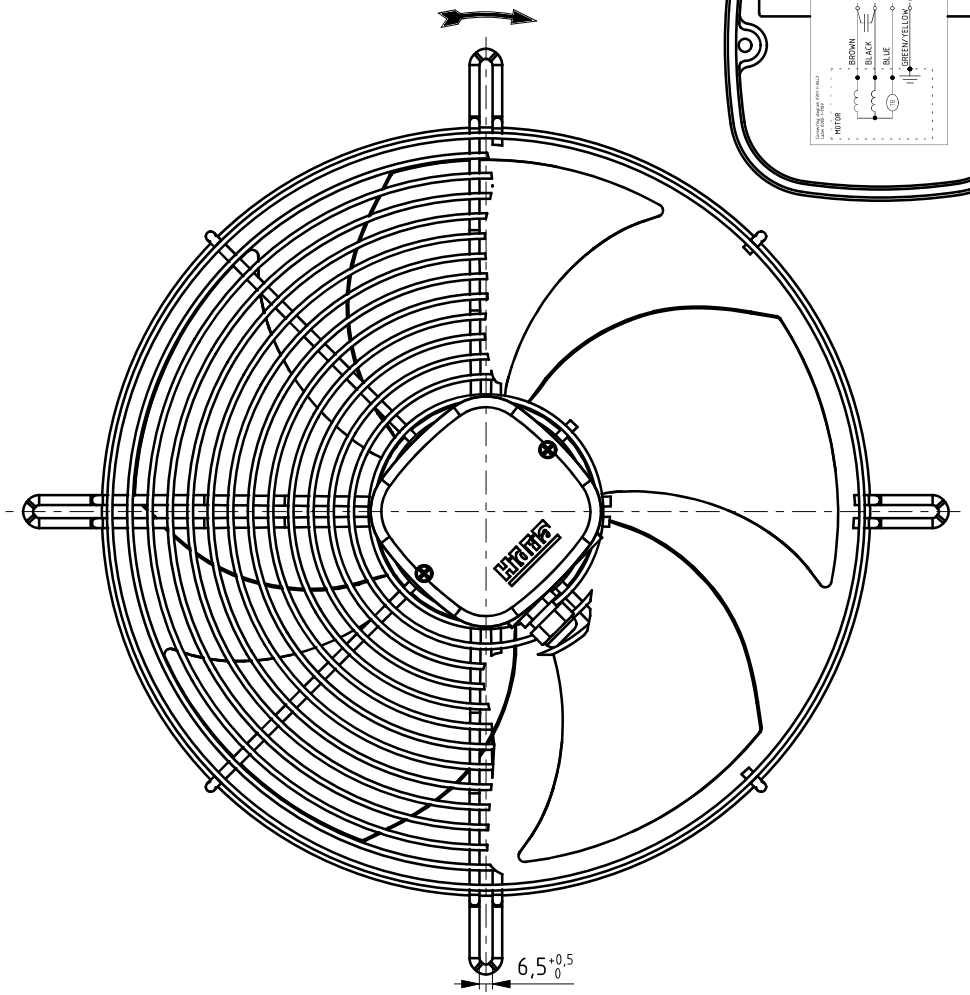

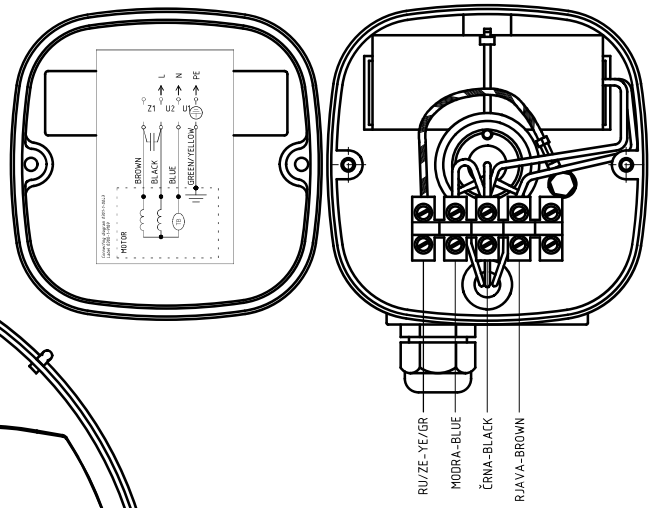

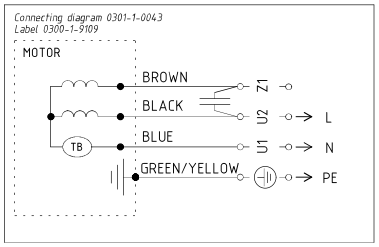

Opomba:
- navodilo za kontrolo ventilatorja 0301-1-4852
- checking instruction 0301-1-4852

MADE IN SLOVENIA CE

DATE

R09R-3530HA-4M-4237 0309-4-1000
1~230V 50Hz 130W 0,60A 1290RPM MAX.AMB.60° C
1~230V 60Hz 165W 0,72A 1380RPM MAX.AMB.60° C
IP54 INS.CL.155 C=4μF/450V
TH.PROT. ROT.

ErP: Effes=29,0% (A,static) N=40,7

AC	C	Zamenja se stator sestav 0309-2-1321 z statorjem sestavom 0309-2-1907 - ErP2015 ustrezen, navodilo za kontrolo ventilatorja 0301-1-4565 se zamenja z 0301-1-4852, uskladi se podatke v nalepki, spremeni se kombinacijo z 31 na 37, Spremeni se verzija artikla z AB v AC. Risba v Windchillu je skladna z risbo v arhivu.	11.09.14	Jure L.
Verzija Artikla: Article revision:	Verzija risbe: DRW Revision:	Opis spremembe: Description of change:	Datum: Date:	Izdelal: Produced:

	DATUM/DATE	IME / NAME
KONSTRUIRAL / DRN:	11.09.2014	Uroš Kunc
ODOBRIL / APP:	12.09.2014	Laharnar, Jure

Potrjeno/Approved

Hidria

POVRSINSKA OBD. SURFACE TEXTURE

MATERIAL

KODA MATERIALA MATERIAL CODE

MASA: MASS:

NETOL. MERE/UNTOL DIM. ISO 2768-m

DZJ

MERILO/FORMAT 2:5/A3

NAZIV: TITLE:

VENTILATOR R09R-3530HA-4M-4237

KODA: CODE: 0309-4-1000

0309-4-1000

VERZIJA ARTIKLA: REVISION ARTICLE: AC

VERZIJA RISBE: DRW REVISION: C.2

LIST/SHEET 1/1